2019 SkillsUSA CHAMPIONSHIP

(Washington Version)

MOBILE ROBOTICS COMPETITION

Ship It

TEAM GUIDE

11 Jan, 2019
Revision C

Contents

Acknowledgments

The success of the competition is the result of the motivated contestants and their instructors, the determined efforts of the National and State Technical Committees, and the generosity of companies donating equipment and supplies. The following companies have contributed resources and support.

Intelitek, Inc.
AZTECH Educational Resources
VEX Robotics, Inc.
UPS
Visual Edge Inc.

Awards

The following companies have supplied awards:

Intelitek, Inc.
VEX Robotics, Inc.

2019 SkillsUSA Mobile Robotics Competition

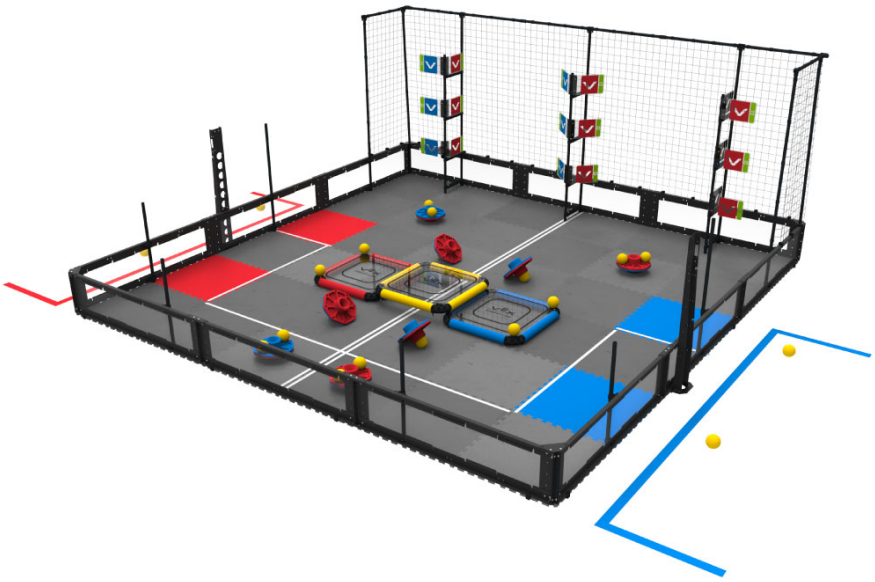

Figure 1: SkillsUSA 2019 'Ship It' playing field

The Game:
This year's challenge is played on a 12 ft x 12 ft foam-mat, surrounded by a sheet-metal and polycarbonate perimeter. There are eight Caps that can be Low Scored on the playing field tiles or High Scored on six Posts around the field. There are also nine Flags, including three Low Flags which can be Toggled by Robots, and six High Flags, which can only be Toggled by being hit with Balls. Teams also score points for Alliance Parking at the end of the Match on their own Alliance Platform, or by Center Parking on the Center Platform.

The Field:
The field contains 22 - 3" yellow plastic balls along with 8 octagon Caps. The object is to pick up Caps that can be Low Scored on the playing field tiles or High Scored on six Posts around the field. There are also nine Flags, including three Low Flags which can be Toggled by Robots, and six High Flags, which can only be Toggled by being hit with Balls. Teams also score points for Alliance Parking at the end of the Match on either of the side Platforms, or by Center Parking on the Center Platform.

The Round:
The competing robot will begin the round positioned completely inside the starting rectangle created by the red and blue floor tiles. For the first 60 seconds of the round, the robot operates completely autonomously. Using sensors and pre-programmed instructions, the robot must attempt to strategically pick and place Caps on to low or high goals and throw the Balls at the flags. Points will be calculated and scored after the Autonomous period. If a robot is parked on the center, red or blue platforms after the autonomous round additional points will be earned. During the next 120 seconds of the round, drivers take control of the robot. Teams score points by picking and placing Caps on to low or high goals and throw the Balls at the flags. Points will be calculated and scored after this period. If a robot is parked on the center, red or blue platforms after the driver control round additional points will be earned.

Scoring:

Toggle High Flag	20 points
Toggle Low Flag	10 point
High Scored Cap (on post)	20 points
Low Scored Cap (on tile)	10 points
Parking on Side Platform at end of match	25 points
Parking on Center platform at end of match	50 points

1: Contest Overview

A Need for Cutting-edge Technology

Many believe that in the future, robotics will encompass and affect every part of life. Even today, robots do the jobs that people find repetitive, dull, dirty, or dangerous. To compete in this evolving field of robotics, companies will be looking for individuals who are fluent in robotic design and programming, mechanical construction and electrical wiring.

Individuals rarely possess all the skills necessary to compete in current and future robotics design and engineering challenges. Therefore, team work will be necessary and advantageous to a successful robotics industry.

Your Team

Success in industry and in this Mobile Robotics Competition will be realized by using a teamwork approach. In the interest of emulating industry, teams should be comprised of specialists in Mechanical Design and (Mobile Robotics) Programming.

1.1: The Client's Needs and the Team Goal

1.1.1: The Client's Needs

Every day thousands of packages are shipped around the world by various shipping companies. Some of these shipments are time sensitive and need to be shipped very quickly while others are not. The cost of shipping items is based upon their weight and distance that each item must travel. This cost is then multiplied based upon the urgency of delivery.

Currently these shipments are primarily handled by personnel that must sort shipments by the time sensitive label that is on each shipment. Next Day and Second Day shipments take priority over the Ground shipments and must be moved to the priority shipment locations. This process takes extra time and there is definitely room for improvement in this process.

The client is requesting this process be improved by a type of system from the Mobile Robotics Team.

1.1.2: The Team Goal

Uline Shipping Supplies (The Client) is a U.S. based company that supplies many different types of shipping supplies and services. The Client is looking for a Robotic system that will not only simplify but also streamline the shipping process for the time sensitive shipments. The Client wishes to sell this type of system to multiple different shipping companies therefore this system must be cost effective and profitable. During the day, the Client's employees will

control and guide the robots to pick and transfer the remaining shipments to their appropriate shipment areas. Therefore, as a Mobile Robotic development team, your goal is to create a robot that can 1) fulfill the picking, sorting and placing process autonomously and 2) be manually controlled by the shipping company employees.

On the Mobile Robotics Competition Field, a simulated warehouse shipping area consists of "Caps" which represent the shipments, and flags which signal that the shipments are ready for shipping. Caps will need to be picked up and placed on the high and low locations.

There are twenty-two yellow balls and eight Caps with four scoring locations for the Caps which are located along the boundary (field walls). Any cones placed on the collection locations benefits the Client and increases productivity and safety.
At the end of the night shift autonomous period, when work has concluded, personnel who have programmed the robot are asked to put it away by parking it in a specified location.

1.2: Specific Project Instructions

1.2.1: Initial Design

The Client, Uline Shipping Supplies is a shipping supply company that is looking for a better and safer way to sort time sensitive packages and signal that they are ready to ship. The Uline Shipping Supplies company has provided a layout of a warehouse; along with these general robot design and operating requirements. First, the robot must autonomously pick up Caps and place them on collection locations and, Second, during the next day, the robot must be able to be operator-controller by warehouse personnel. Your team's goal is to create a robot that can effectively and efficiently meet these Client requirements.

For budgeting and scheduling purposes, the Client also requires that each stage of the design, fabrication, and programming process be well-documented. This requires that your team provide a complete bill of materials including assembly instructions.

After your prototype robot has been designed, programmed, assembled, and documented, your Team will test the robot in a simulation of the Client's location at the Mobile Robotics Competition event.

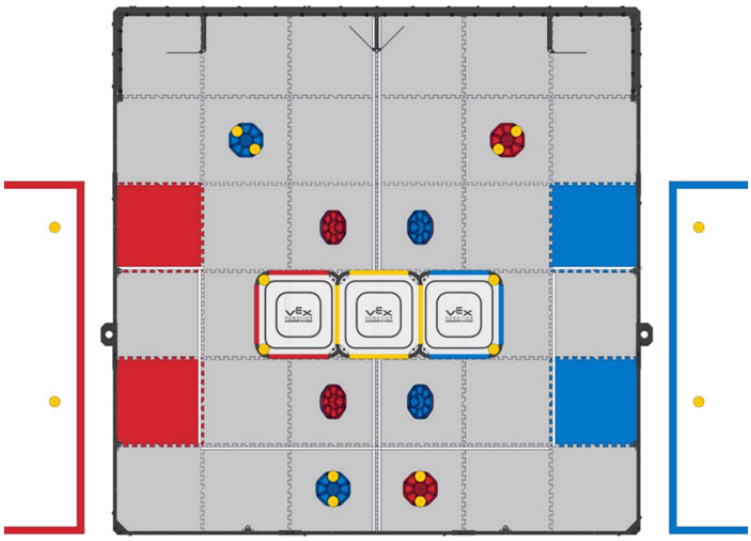

Figure 2: Top view of Clients Cap placements

Note: All Caps are to be placed with the Blue side facing upwards at the start of the match

1.2.2: Design Change and Concurrent Engineering

The Client will review the prototype and may likely require one or more changes in its operation. The Team must be prepared to handle different storage locations that may need to be moved periodically. Having a robot that can handle diverse challenges will make your design more appealing to the Client.

1.3: Project Guidelines

1.3.1: Specific Requirements

The Client's Engineering Project Manager has provided an outline of materials to begin your planning and manufacturing process. Your success on this project is based upon the following criteria:

1. Teams will be given an objective by the SkillsUSA Technical Committee. The goal is to be met by using a designed, built and tested mobile robotic system.
2. Teams must be comprised of two members.
3. An Engineering Notebook is to be created and used by team members to chronologically document their project for the competition. It should include pictures, detailed assembly instructions; design evolution with changes, problems encountered and solved, decisions made, and test results. All pages must be bound, numbered, and dated (No three-ring binders) Here is a link to the appropriate type of notebook that should be used.
https://en.wikibooks.org/wiki/General_Engineering_Introduction/Notebooks/Writing_Pattern
5. Teams are required to bring a laptop with ethernet connection port to the competition along with their Engineering Notebook (to be used as reference tools). The laptop may already have programming code for the robot along with support materials for the presentation.
6. Teams must bring a fully assembled robot that is within the design parameter of the parts list from Appendix A
7. Team members are responsible for double-checking each other's work. Thus, they shall both assist with build and quality control.

8. During an oral presentation session, each team will have 10 minutes to share their solution with a group of judges, which should be viewed as the "Client". The presentation may incorporate support materials such as posters, lab notebooks, a prototype robot, and/or PowerPoint presentation.
9. After teams have completed the first competition rounds with their Robot, a design change may be introduced. At this time, the competition will be repeated.
10. At all times, team members are required to adhere to industrial safety standards, such as wearing of eye, ear, and hand protection where appropriate.
11. All engineering notebooks, forms, documentation, and programs must be turned in to the technical committee members at their request.
12. All team members and advisors are required to attend a debriefing session after the competition has concluded.

1.4: Kit of Parts

1.4.1: Kit of Parts Overview

Your robot may **ONLY** be made of components listed on the SkillsUSA kit (VEX part #276-3000) of parts. A list is available in Appendix A.
Note: there will be NO V5 kits allowed at the state competition.

1.5: Team Rules and Guidelines

1.5.1: Competition Rules

Below are the official rules and guidelines for the Mobile Robotics Competition. All teams will be expected to adhere to these rules.

1.5.1.1: Definitions

- Autonomous Period: A 60-second period in which robots operate based only on pre-programmed instructions and sensor inputs. Team members are not allowed to interact with the robot during this period.
- Operator-Control Period: A 120-second period in which robots are operated by team members through the use of a wireless transmitter and receiver.
- Starting Tile: A colored field tile, red or blue, that designates where Robots must start the Match. Team can choose to start from any of the four (4) colored tiles.
- Cap: An 8-sided, disc-shaped plastic element with a "flat-to-flat" diameter of roughly 9.25" (234.95mm), an "edge-to-edge" diameter of roughly 9.70" (246.38mm), an overall height of roughly 4.6" (116.8mm), and a mass of roughly 335g (0.74 lb). Caps have one blue side and one red side, and a Core in the center.
- Ball: A yellow plastic spherical object with a diameter of 3.0" (76mm) and a mass of 0.12lb (55g). Balls can be used to Score Flags.
- Parked: A robot is considered parked if it is **completely** within one of the three parking platforms in the middle of the field.
- Preload: Two (2) balls a team may place on their robot. The preload object must be fully within the starting zone prior to the start of each match and not be touching the field tiles.
- Scored: An object is scored if it is not touching a robot and meets the following criteria.
    - A Cap is stacked on a goal (High Scored Cap)

    - A Cap is flipped with the blue side down (Low Scored Cap)
    - Ball toggles flag

- Scoring Object – A Cap or flag that is toggled.
- Colored Foam Tile - A foam floor tile colored gray, blue or red.

1.5.1.2: Field Setup

- The field is 12' by 12', enclosed by an 11.5" tall field border.
- The surface of the field is comprised of gray, blue and red foam tiles.
- There are red/blue floor tiles along the perimeter of the field. This is considered the starting locations for the robot. The robot can be placed anywhere within these tiles however, it must be **fully** within the starting tile.

1.5.1.3: Scoring

- Points will be calculated and totaled after the autonomous period and after the operator control period. *Note: if an object is scored and counted after the autonomous period it can and will be counted again after the driver control period if it has remained in the scoring position after the driver control portion has ended.*
- A Cap that has the blue side down and is touching the field tile are worth ten (10) points each.
- A Cap placed on a high goal with blue side down are worth twenty (20) points each.
- A low flag (Bottom Two) toggled is worth ten (10) points each.
- A high flag toggled is worth twenty (20) points each.
- Any robot parked **completely** within and on top of either of the side platforms at the end of the match sequence twenty-five (25) points.
- Any robot parked completely within and on top the center platform at the end of the match sequence twenty-five (50) points.

1.5.1.4: Match Sequence

- Autonomous Period: 60 Seconds.
- Operator Control Period: 120 Seconds.

1.5.1.5: Competition Match Rules

- Each round will be at most three minutes long and will feature only **ONE** robot.
- Any object that leaves the field will NOT be returned to the field.
- During a round, robots may be remotely controlled only by the drivers and by software running on the control system. If any team member touches his or her team's robot at any time during a round, the robot will be disabled and the team disqualified from that round.
- Scores will be calculated at the end of the 60 second autonomous period after all robots and field elements come to rest. Bonus points will be awarded to teams that can park their robot at the conclusion during the autonomous period. Scores will be calculated again after the next 120 second operator control period.
- Operators are not to enter the field or touch the robot at the end of either round until event personnel gives permission.

- Robots must start the round **completely** inside the rectangle created by the red/blue starting tiles.

1.5.1.6: Robot Rules

- Robots must have a starting size of no larger than 18" by 18" by 18" at the start of a round but they may expand to any size once the round has begun. If the robot is initially larger than the listed starting size, it will not be allowed to compete. The size of the robot may be checked by the event personnel at any time during the competition if they feel that the robot is over the size limit.

- Robots may only be constructed from the same type and quantity of parts found in the SkillsUSA VEX Robot Kit or additional, approved non-VEX materials, and only after the challenge has been released to teams. See Appendix A for a list of parts found in the SkillsUSA VEX Robotics Kit.

- No robot may have mechanisms that could potentially damage the scoring objects, playing field or field elements, or pose a safety hazard to teams or spectators.

- All parts of the robot must remain attached to the robot for the duration of the round. Any infraction of this rule may result in an immediate stopping of the round and a loss of points scored. Minor pieces that unintentionally become detached from the robot, or are the result of improper design/construction will not cause a point loss.

- Teams may not modify any part of the control system or any motor or sensor.

- Robots are allowed only the following non-VEX components:
    - Any parts which are identical to legal VEX parts, such as screws, zip ties, rubber bands, etc.
    - Any non-functional decorations that do not affect robot performance.

  Commercial threadlocker may NOT be used.

1.5.2: Field Malfunctions

IN THE CASE OF A FIELD FAILURE: The team leader will communicate the problem to a representative of the Technical Committee. If it is determined that it is, in fact, a field problem, the round will be replayed. In the case of a replayed round, the previous score will not be counted, and the team's new round score will count, regardless of whether the team scores more or less points. If no field failure is determined, the score for that round will stand "as is".

IN THE CASE OF PROGRAMMING PROBLEMS: A robot's program is the responsibility of the team. All software must be original copies. If your team develops a problem with the software or robot program, the Technical Committee will work however it can to resolve the problem, but no rounds will be replayed due to problems with the robot's program.

The following software platforms are recommended however NOT required:

EasyC V4 for Cortex
EasyC V5 for IQ / Cortex

Other programming software will not be supported by the Technical Committee.

1.6: Group Organizational Goal

1.6.1: Team Dynamics

The competition should run much like you would expect commercial projects to be undertaken. Group members are expected to interact professionally, respect ideas & suggestions from each other, and work as a team. At a minimum, the Team shall have a mechanically-oriented person to lead in mechanical design and a programmer to lead robot programming. Both team members should assist in the actual construction process.

The contest is designed to demonstrate the value of teamwork on a project. Teams should divide duties equally among all members; no individual should dominate. When necessary to achieve a particular outcome or goal, a team member will assist their partner. Each Team member is responsible for evaluating each other's work and contributing to the overall project's quality control.

1.6.2: Team Objectives

The competition consists of developing a robotic device, at a low cost, for The "Client". The device must meet specific performance requirements provided by the customer. Multiple teams will be designing a device to meet the customer's requirements, thus a competition will be scheduled to evaluate the competing devices and select the winning proposal.

Each team should work towards the following objectives:

- Construct a fully operational prototype robot that meets the requirements of the customer, at a low cost.
- Maintain an Engineering Notebook chronologically documenting the design evolution, materials used, and problems encountered & resolved, decisions made, and test results obtained.
- Be prepared to orally present the team's final solution to the problem, incorporating support materials such as posters, lab notebooks, prototype robot, and/or PowerPoint presentation. Each team member is expected to participate in the presentation.
- Demonstrate the functionality of the robotic device in competition.

A successful project will require the use of critical thinking and problem-solving abilities, time-management skills, professional writing skills, and clear, focused oral communication.

1.7: Judged Scoring

1.7.1: Oral Presentation and Supporting Material (200 points available)

Each team will have ten minutes to orally present their final solution to the Judges ("Client"). They may bring additional support materials such as posters, sales brochures, lab notebooks, and the prototype robot to share with the judges.

<u>Presentation Quality</u>
A successful oral presentation will demonstrate or contain:

- Both team members participate in presentation.
- Subject matter is well organized
- Objective of presentation is clear to customer
- Problem description - What does the customer want or specify?

- Inspiration for robotic device design - What prompted the design?
- Evolution of design - What design changes were necessary?
- Problems - What significant problems were encountered & resolved?
- What are the advantages of the design being presented?
- Summary - What are the final design features?

Support Materials
A successful oral presentation also has the following attributes:

- Slides or View graphs which are clear, concise and easily understood.
- Bill of Materials that lists the cost & materials for the prototype.
- Programming documentation that includes a program flow chart for review.

Note: A projector and screen will be available but teams must supply their own laptops for their presentation. Bring power cords and any cables you might need to plug into "typical" projector.

1.7.2: Engineering Notebook attributes (200 points available)

Overall Appearance and Professionalism:
The Engineering Notebook will be judged on format, organization, and presentation. For information on formatting and content of an engineering notebook, visit http://www.bookfactory.com/special_info/engr_notebook_guidelines.html.

Bill of Materials:
Each team will be required to list all the materials used on their robot. The type, quantity and cost of each part should be provided.

Assembly Instructions:
Teams are encouraged to create detailed assembly instructions for their robot prior to arrival at the competition.

Illustrations of Design Process:
Teams are encouraged to include pictures and sketches of their design process in their Engineering Notebook.

1.8: Required Materials

1.8.1: Required Components and Supplies

Teams require the following materials to complete the competition.
1. One Fully Assembled Vex Robot System that meets the part specifications detailed in Appendix "A"
2. One Computer with FUNCTIONING programming software for the VEX Robot (please make sure the students can log into this computer off of the schools network)

Note: No internet access is provided at the contest

1.8.1.1: Technical Committee-Provided Components

The Technical Committee will provide:

1. Design Challenge competition field and scoring objects.
2. General workspace for teams to cut materials along with a vise and hacksaw.
3. One eight-foot conference table.
4. One standard 120V electrical outlet.
5. The description of the Mobile Robotic Design challenge.

1.8.2: Team Provided Components

Teams are to bring the following components (and may also bring a small toolbox):

1. Engineering Notebook.
2. Safety glasses and work gloves. Please Note: Team members **MUST** wear safety glasses when they are on the playing field and while they are in their work area.m
3. Dremel (or similar) rotary tool with appropriate attachments.
4. Drill and drill bits.
5. Allen wrench set (Imperial).
6. Aircraft metal snippers for cutting VEX metal.
7. A Wi-Fi enabled laptop equipped with licensed VEX programming software (for the Cortex microcontroller) and suitable presentation software (such as Microsoft's PowerPoint). An additional tablet device is allowed for presentations. Please note that there will be no free Wi-Fi at the convention center on the day of the contest.
8. Power strip and extension cord.
9. Calculator (standard, scientific or graphing).
10. Tape measure and/or ruler.
11. Hammer.
12. Phillips and slotted screwdrivers.
13. Metal file.
14. Pliers.
15. Graph paper, pens, pencils, tape, electrical tape, markers and scissors.
16. Multi-meter.
17. Replacement batteries and chargers - <u>All 7.2V robot batteries must be made by VEX Robotics. 9V and AAA can be manufactured by any vendor.</u>
18. Grease or graphite (non-aerosol).
19. VEX competition switch simulator and VEX programming cable
20. Empty small parts bin or storage container.
21. Tap set
22. A FULLY ASSEMBLED ROBOT

Note: ONLY the above listed items will be allowed in the contest area during the competition.

2.0: Safety

2.1: Importance of Safety

In industry, it is in the best interest of both employer and employee to maintain a safe work environment. When a company's history of employee injury incidents is low, the company increases its likelihood of reduced insurance rates and Workers Compensation fees.

Safety considerations will be taken into account during the Mobile Robotics Competition to mirror a professional industrial environment.

2.2: Safety Violations

If a team or a team member violates a safety rule, or operates their robot in an unsafe manner, the following penalties will be levied:

1st Violation:
Team will be issued a written warning.

2nd Violation:
Team will have 50 points deducted from their total score.

3rd Violation:
Team will be disqualified.

2.3: Safety Issues

1. Team members must keep their work area reasonably clean. Clean work places promote efficient and safe working conditions. Special attention should be paid to keeping the floor clean and to the elimination of tripping hazards such as uncovered or dangling power cords in of walking aisles.
2. Team members must keep their teammates and other teams aware of possible dangerous situations, such as pinch points, sharp edges, tripping hazards (power cords) and tethered or wireless enabling of robots.
3. Team members **MUST** wear safety glasses when they are on the playing field and while they are in their work area.
4. Tampering with or dismantling of any part of the supporting equipment (e.g., computers, printers, etc.) is a direct safety violation, and can be grounds for immediate disqualification.
5. Teams are awarded 50 points at the end of the contest based upon them cleaning up their work area.

3.0: Documentation

3.1: Document Submission

The following documentation will be judged at the Competition.

- Virtual Programming Challenge Code
- Engineering Notebook
- Math Problem (This will be made up of various robotics-based questions such as gear ratio, programming, and other robotics math related questions)

  For example: *The Vex encoders have 90 ticks per revolution. How far has a robot with 3" diameter wheels traveled if the robot has read 3000 clicks from the encoder?*

SKILLSUSA
Mobile Robotics
Judging Form 2019

Team: _____

	MAXIMUM POINTS	CHECK	POINTS AWARDED
Oral Presentation			
1. Presentation Quality	150		
2. Presentation Support Materials	50		
Presentation Subtotal	**200**		
Engineering Notebook			
1. Overall Appearance and Professionalism	50		
2. Bill of Materials	50		
3. Assembly Instructions	50		
4. Illustrations of Design Process	50		
Engineering Notebook Subtotal	**200**		
Robotic Task Performance			
1. Round 1 and 2 Score	300		
Robotic Design Challenge Performance Subtotal	**300**		
Virtual Programming Code			
1. Virtual Programming Code	0		
Virtual Programming Code Subtotal	**0**		
Concurrent Engineering and Area Organization			
1. Round 3 and 4 Score	150		
2. Area Clean and Organized	50		
Concurrent Engineering Performance Subtotal	**200**		
Math Problem	**100**		
Safety (deductions) (if any)			
GRAND Total	**1000 pts**		

Appendix A – SkillsUSA VEX Robotics Kit Bill of Materials

This year's kit will be the VEX Classroom & Competition Super Kit: P/N 276-3000

NO V5 KITS WILL BE ALLOWED IN THE CONTEST THIS YEAR.

Note: The kit comes with (1) 7.2V 3000 mAh battery and six AAA batteries as well as their respective chargers.

Teams may bring additional 7.2V 300 mAh batteries and chargers to the competition; however, the batteries and chargers must be made by VEX to guarantee consistency and to level the playing field. Other brands of AAA batteries are allowed.

Refer to the VEX robotics website for a complete 276-3000 Kit Contents

Appendix B – Field Information
Field Pictures

The Caps and Balls and Flags are placed as follows before the start of each match.

1. (1X) Ball for Preload into each Robot.
2. (4X) Balls placed in the corner cutouts on the Alliance Platforms.
3. (1X) Blue-up Cap* with (2X) balls opposite each other on top of the Cap forming a line perpendicular to the field perimeter wall.
4. (1X) Red-up Cap* with (2X) balls opposite each other on top of the Cap forming a line perpendicular to the field perimeter wall.
5. (1X) Blue-up Cap* with (2X) balls opposite each other on top of the Cap forming a line to the closest field perimeter corner.
6. (1X) Red-up Cap* with (2X) balls opposite each other on top of the Cap forming a line to the closest field perimeter corner.
7. (2X) Red-up Caps* tilted away from the Red Starting Tiles, each with (1X) ball underneath.
8. (2X) Blue-up Caps* tilted away from the Blue Starting Tiles, each with (1X) ball underneath.
9. (3X) Flags closest to the Red Starting Tiles are toggled to scored Blue (Blue-out).
10. (3X) Flags in the center of the field are toggled to neutral (centered).
11. (3X) Flags closest to the Blue Starting Tile are toggled to scored Red (Red-out).

*All Caps are centered on their respective tiles.

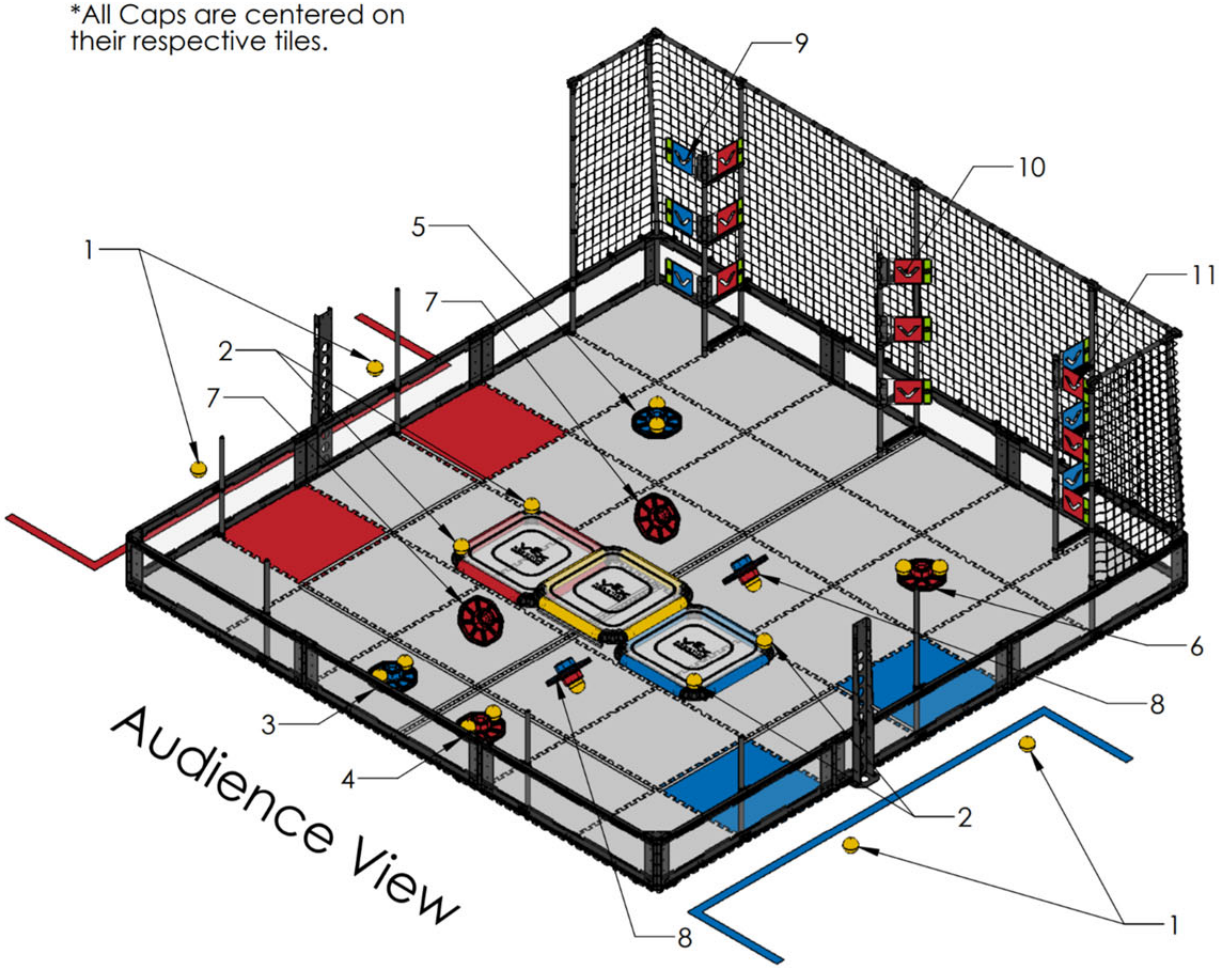

Note: All Caps are to be placed with the Blue side facing upwards at the start of the match

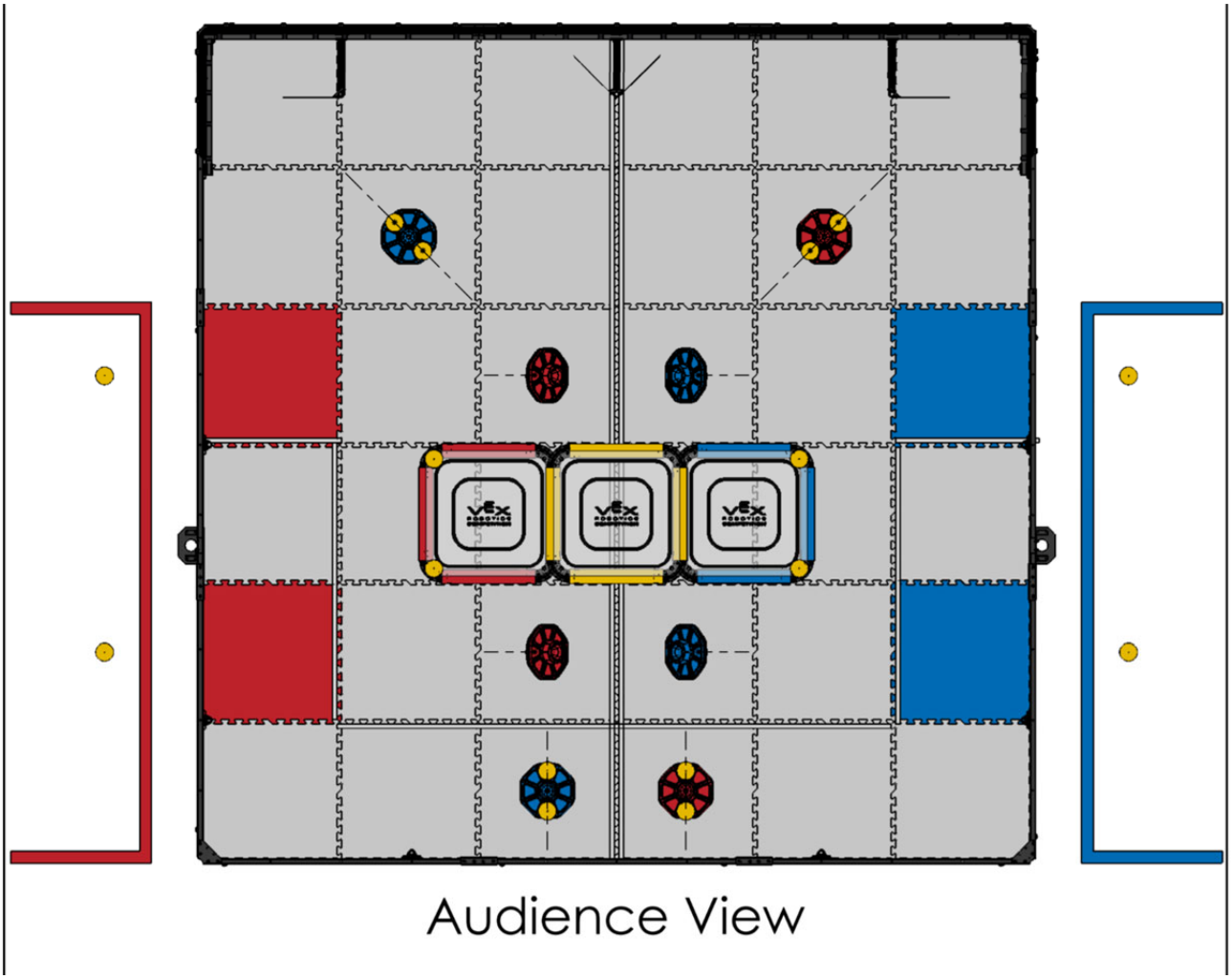

Note: All Caps are to be placed with the Blue side facing upwards at the start of the match

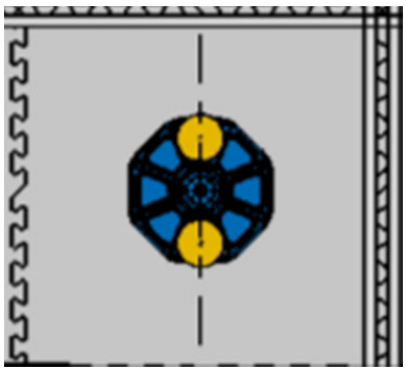

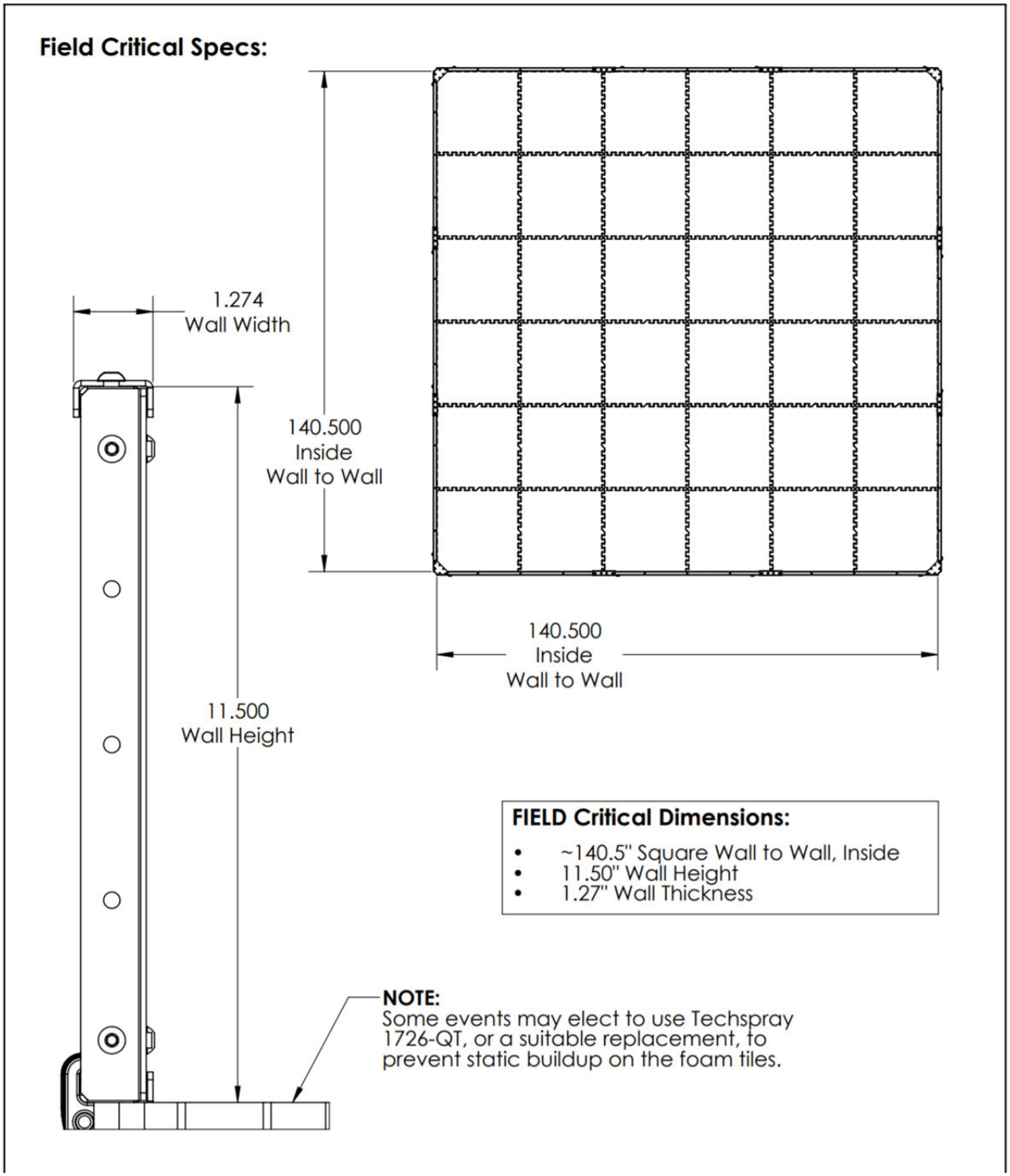
Field Critical Specs:
1.274
Wall Width
140.500
Inside
Wall to Wall
140.500
Inside
Wall to Wall
11.500
Wall Height
FIELD Critical Dimensions:
• ~140.5" Square Wall to Wall, Inside
• 11.50" Wall Height
• 1.27" Wall Thickness
NOTE:
Some events may elect to use Techspray
1726-QT, or a suitable replacement, to
prevent static buildup on the foam tiles.

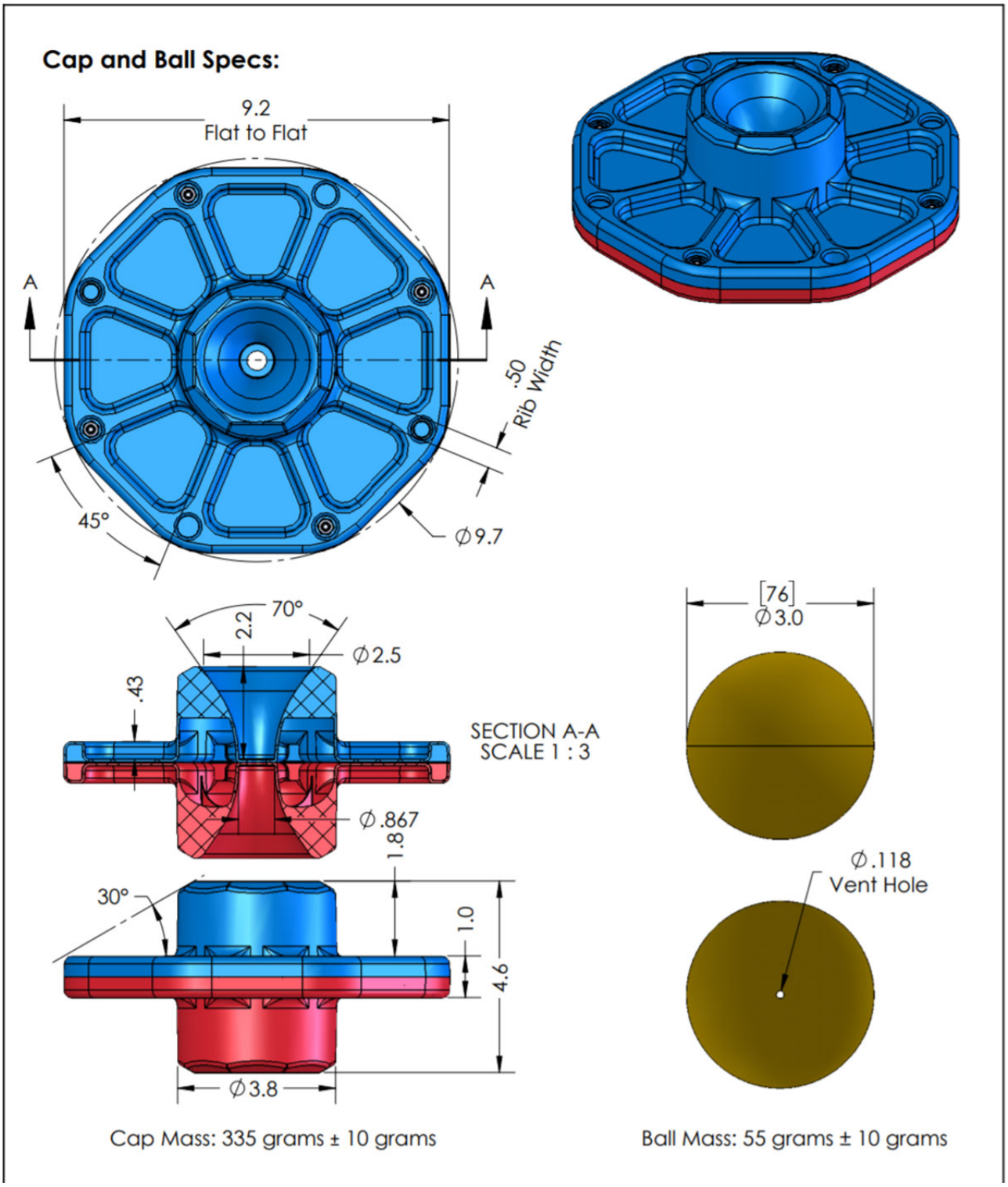

Note: All Caps are to be placed with the Blue side facing upwards at the start of the match

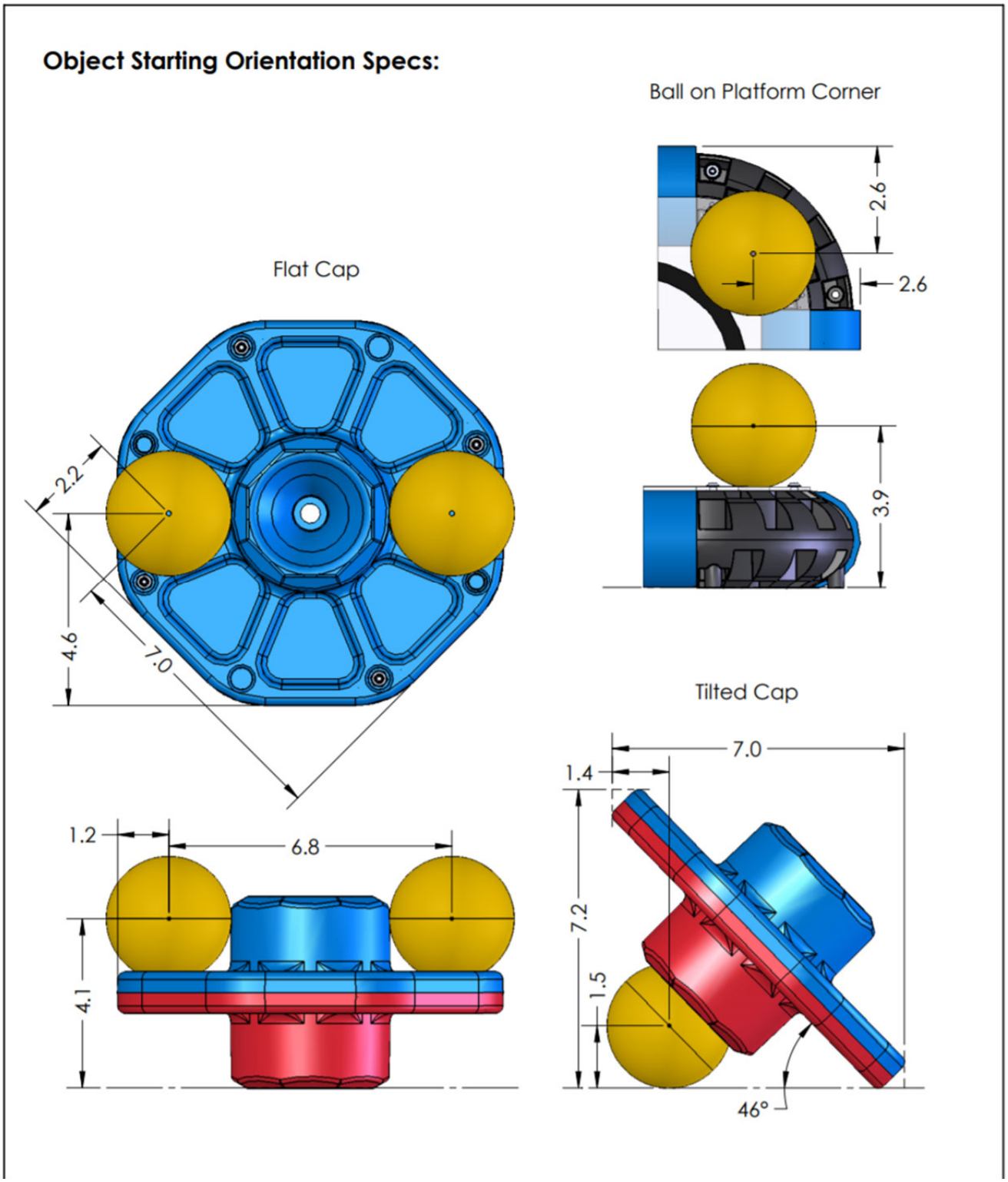

Note: All Caps are to be placed with the Blue side facing upwards at the start of the match

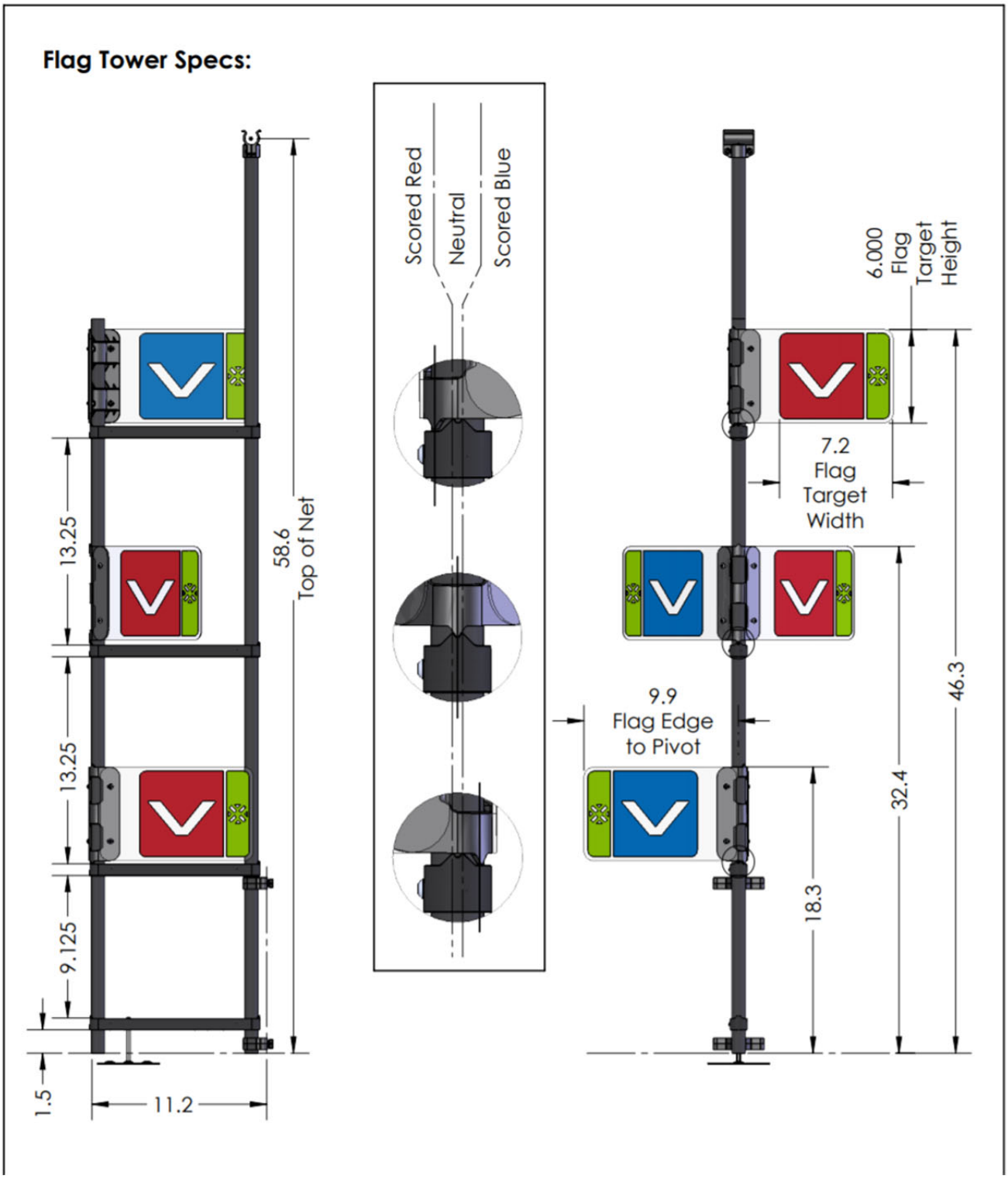
Flag Tower Specs:
Scored Red
Neutral
Scored Blue
6.000
Flag
Target
Height
7.2
Flag
Target
Width
9.9
Flag Edge
to Pivot
13.25
13.25
9.125
1.5
11.2
58.6
Top of Net
18.3
32.4
46.3

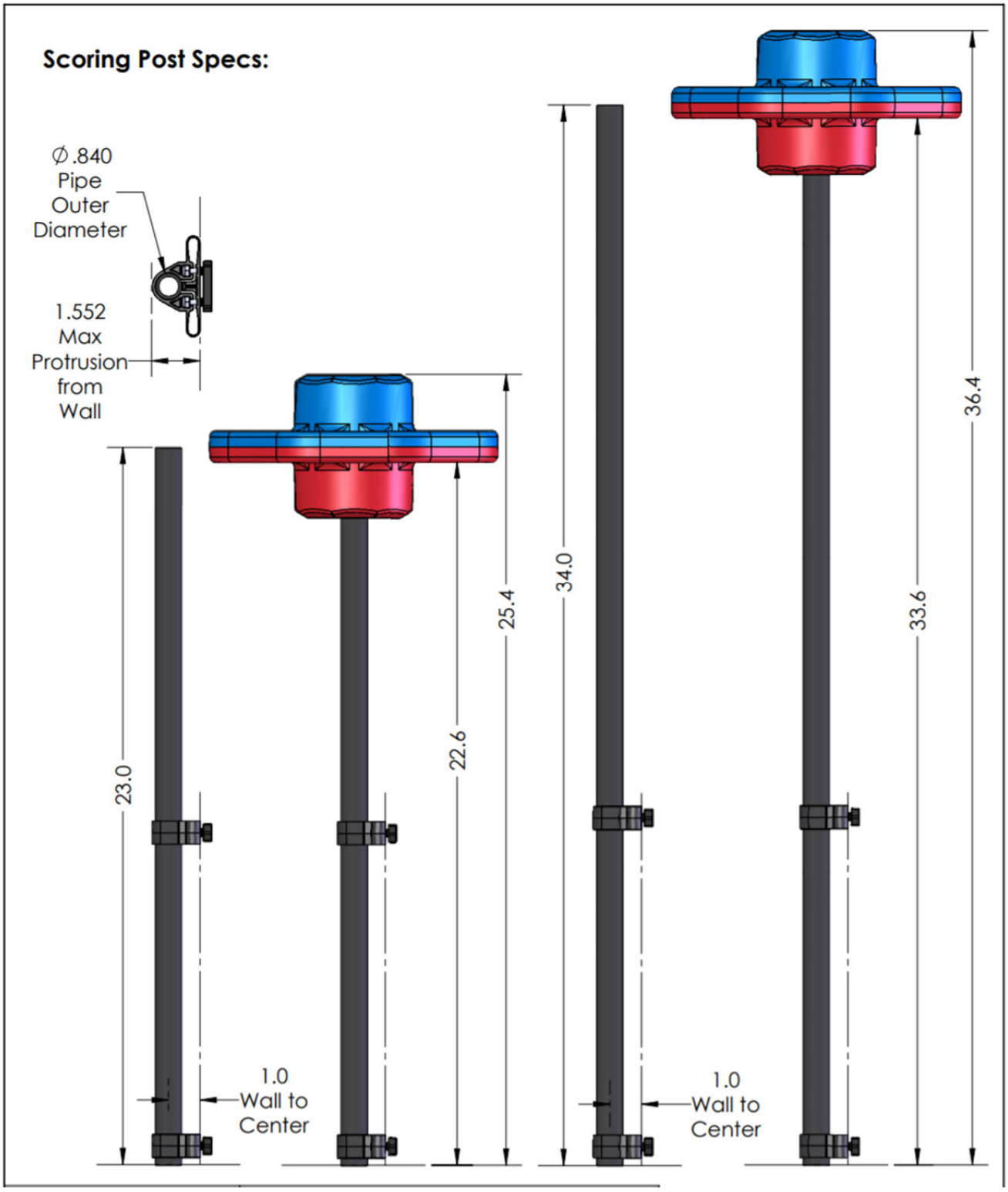

Note: All Caps are to be placed with the Blue side facing downwards for the scored object to count

Platform Specs:

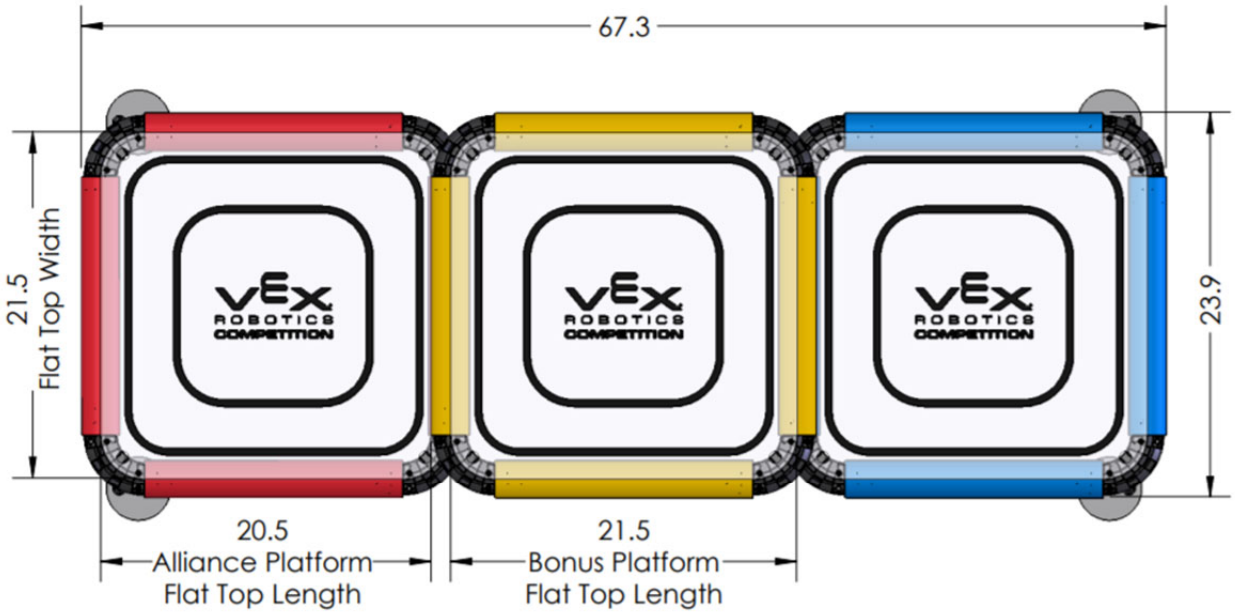

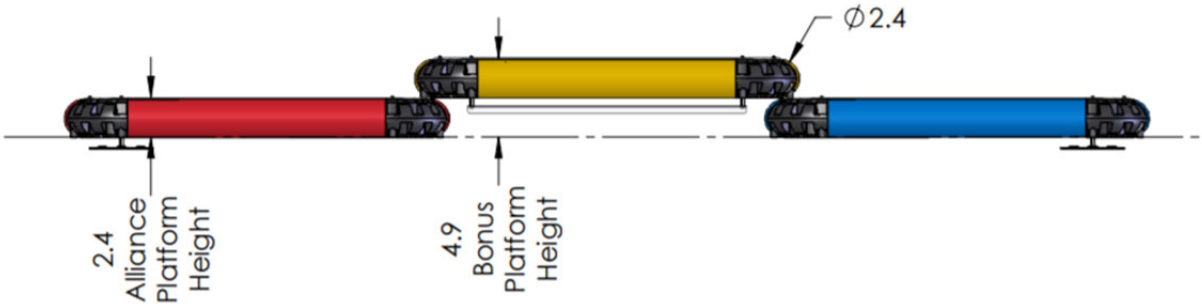

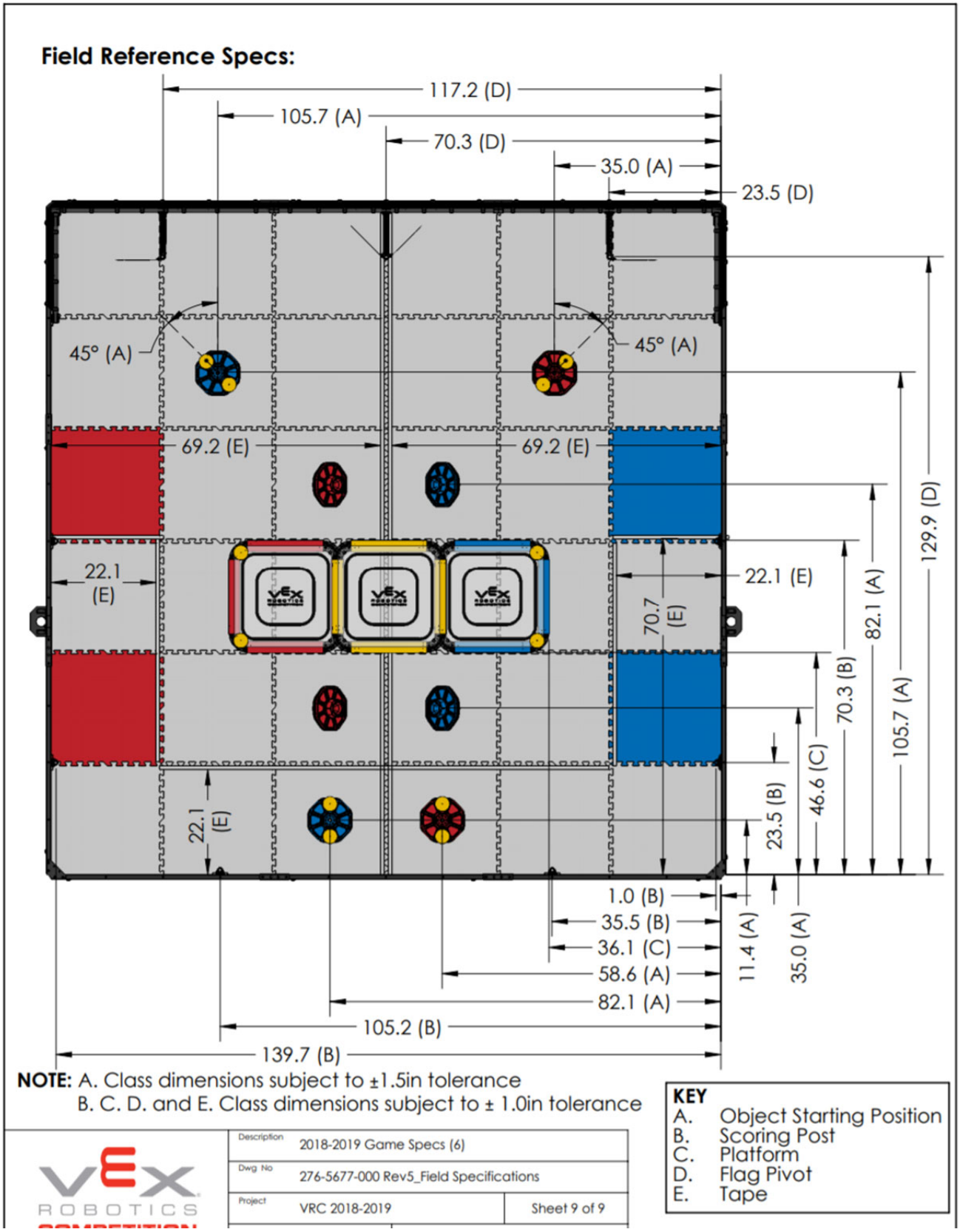
Field Reference Specs:
117.2 (D)
105.7 (A)
70.3 (D)
35.0 (A)
23.5 (D)
45° (A)
45° (A)
69.2 (E)
69.2 (E)
22.1 (E)
22.1 (E)
70.7 (E)
129.9 (D)
82.1 (A)
70.3 (B)
105.7 (A)
46.6 (C)
23.5 (B)
22.1 (E)
1.0 (B)
35.5 (B)
36.1 (C)
58.6 (A)
82.1 (A)
105.2 (B)
139.7 (B)
11.4 (A)
35.0 (A)
NOTE: A. Class dimensions subject to ±1.5in tolerance
B. C. D. and E. Class dimensions subject to ± 1.0in tolerance
KEY
A. Object Starting Position
B. Scoring Post
C. Platform
D. Flag Pivot
E. Tape
VEX ROBOTICS
Description 2018-2019 Game Specs (6)
Dwg No 276-5677-000 Rev5_Field Specifications
Project VRC 2018-2019
Sheet 9 of 9

Note: All Caps are to be placed with the Blue side facing upwards at the start of the match

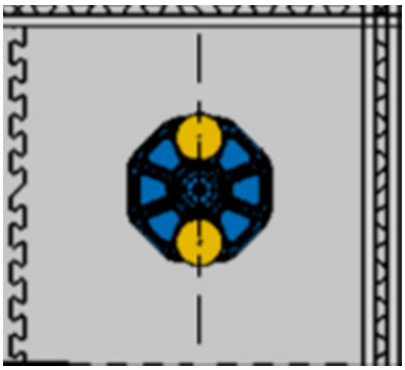

Detent – The protruding feature upon which the *Flag* pivots that is used in conjunction with the *Flag's* pointer to determine if a *Flag* is *Toggled*.

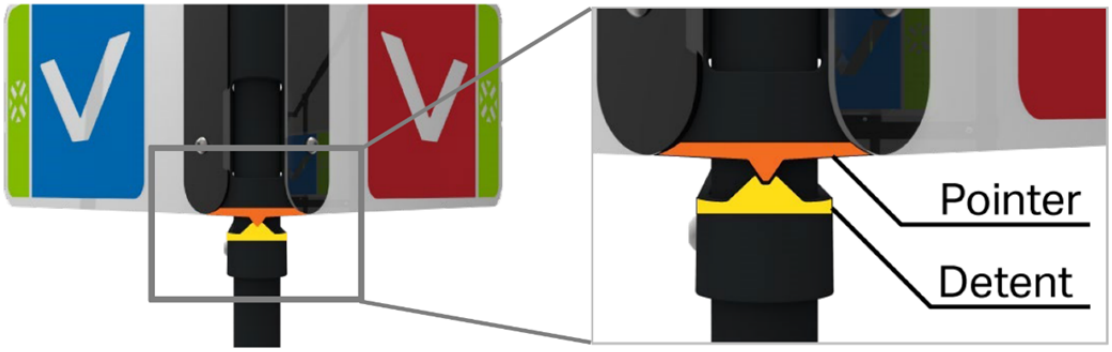

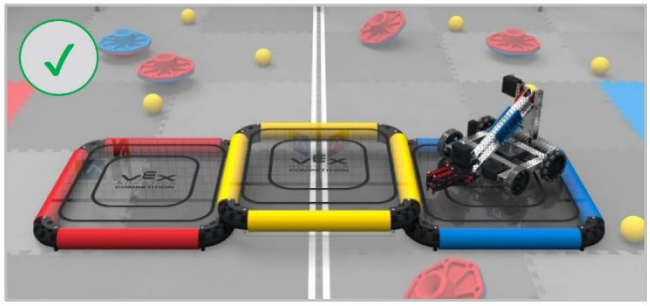

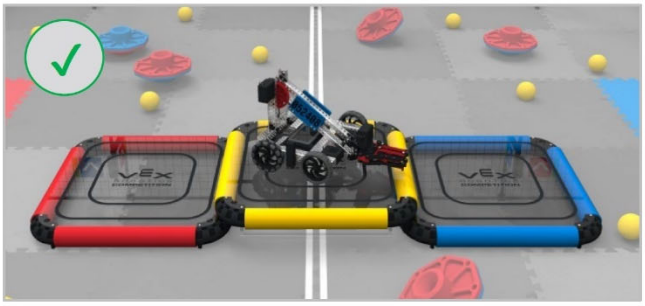

Preload – The *Ball,* one (1) that must be placed on the field such that it satisfies the following conditions prior to the start of the *Match*.

- The *Preload* is touching one *Robot*.
- The *Preload* is fully within the field perimeter

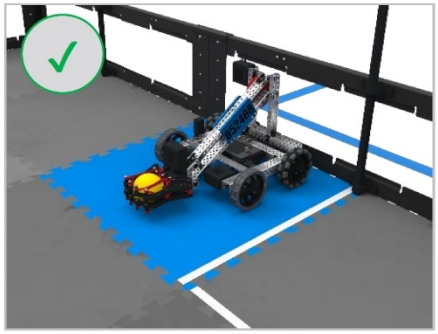

Figure 6: *A legal Preload.*

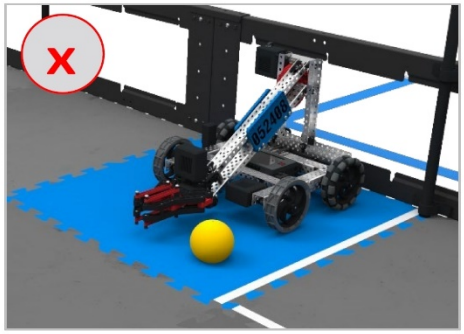

Figure 7: *An illegal Preload*

High Scored – A *Cap* status. A *Cap* is *High Scored* when its Blue *Core* is touching a *Post*, the *Cap* is not touching any other *Field Elements*, and the *Cap* is not touching a *Robot*

Figure 10 (left): *A Cap which is High Scored, because the Blue Core is contacting the Post.*

Figure 11 (right): *A Cap which is Not scored, because it is touching a Robot*

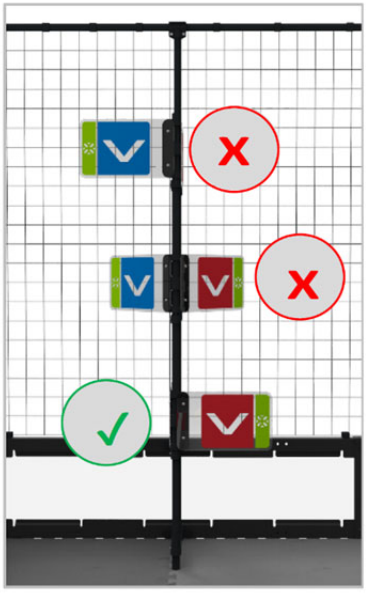

Figure 12 (left): *A Flag tower depicting three Flag states. The top Flag is at the starting configuration and not scored. The middle Flag is nested in the Detent and not scored. The bottom Flag is Toggled and scored.*

Figure 13 (right): *A close-up of the Toggled flag with the Detent and Flag pointer highlighted.*

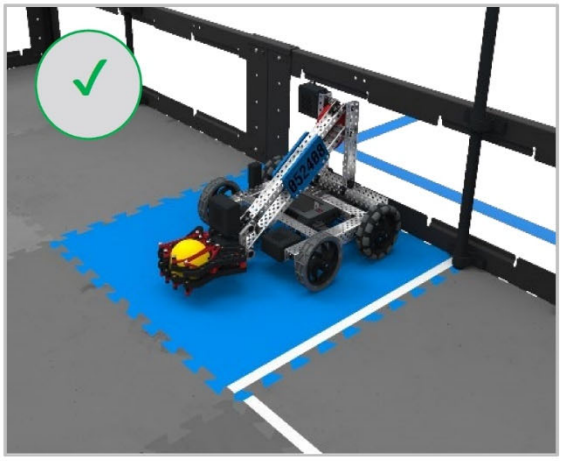

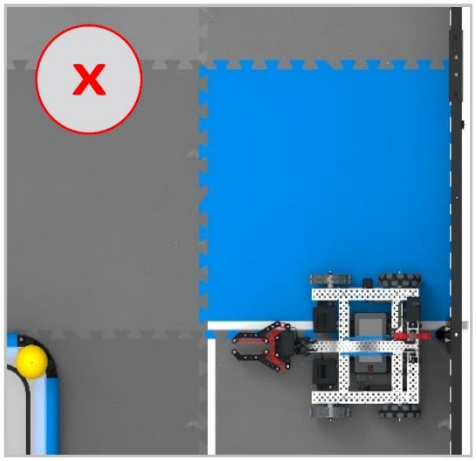

Figure 14 (left): *A legal starting position with a Preload*

Figure 15 (right): *An illegal starting position due to touching a gray tile and no Preload.*