SkillsUSA
2011 Contest Projects

Technical Drafting

Click the “Print this Section” button above to automatically print the specifications for this contest. Make sure your printer is turned on before pressing the button.

Download additional contest files.

P.O. Box 3000
Leesburg, VA 20177-0300
Voice: (703) 777-8810
Fax: (703) 777-8999

Memo:

Date: June 10,2011
To: Technical Drafting Contestants
From: Technical Drafting Committee
Re: Housing for Gear Driven Pulley

Overview:

A major automobile Manufacturer has requested from our company the design of a front cover housing assembly that will be used to provide an additional pulley to drive an AC motor. This company has provided pertinent details regarding the housing, pulley diameter and V-belt type requirements, as well as the gear specifications. This company requires that the pilot base of the housing have a hole drilled through it for oil to pass through the gallery of the housing and the bushing, and that the hole needs to be align with an existing oil feed hole in the engine front cover. The details of the hole placement will be provided in their documentation. The drawings below are required to complete this Housing Assembly for Gear Driven Pulley.

The part numbers to be used are:

15980	1	Assembly	Housing/Gear-belt Assembly
15981	1	Detail	Aluminum Housing
15982	1	Detail	Bronze busing
15984	1	Detail	Threaded and keyed shaft
15985	1	Detail	Spur Gear
15986	1	Detail	V-Belt Pulley

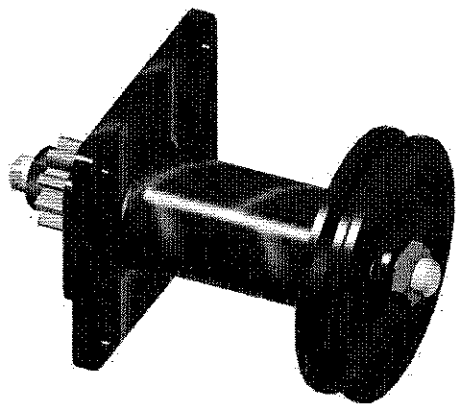

General Considerations:

- All dimensions in this documentation are given in inches unless otherwise noted.
- Use nominal dimensions for all parts unless special fits are required.
- Dimensions are shown in this document as 4 place decimals for clarity - you do not need to make them match the title block tolerance zone for this test.
- A surface finish of 32 microinches shall be applied to all sealing surfaces (which includes Datum A on the Housing), the inside V of the V-Belt Pulley, the bearing surface of the Shaft, and the Spur Gear teeth mating surfaces. All other surfaces will have a finish of 63 microinches.
- Show all threads as a simplified version – is not a requirement to illustrate 3d threads
- Unidentified fillets shown on the housing are .25R.

Drawing Requirements Summary:

PART: 15980 HOUSING ASSEMBLY FOR GEAR DRIVEN PULLEY:

This is the assembly drawing that calls out the parts that make up the assembly, and shows how it is to be assembled.

YOUR TASK: *Produce a drawing that shows how to properly put this assembly together. At a minimum you need to provide a full section view and an exploded isometric view along with the Bill of Materials. On this drawing include a note with suggestions on how this assembly could have been designed for better functionality or assembly.*

PART: 15981 Housing:

This is the main component of this engineering project. This Housing will support a bearing and a shaft and have an oil gallery that needs to be aligned with an existing feed from this particular automobile engine. The housing will be cast with A360, a die cast aluminum alloy with a density of .095 lbs/cubic inch. The counterbore and the oil hole are sized to match the Bronze Bushing. The head of the Bronze Bushing will be flush with the face of the Housing and the oil hole size & location need to match the hole in the Bronze Bushing.

Your task is to define the following geometric tolerances on the part as follows:
1) Specify a flatness tolerance of 0.0020 on Datum A.
2) Designate the 1.1266/1.1250 shaft hole as Datum B and apply a perpendicularity tolerance of .0050 with respect to Datum A to the same shaft hole.
3) Specify a positional tolerance of .0050 at maximum material condition with respect to Datum A and Datum B on the shaft hole counterbore. Remember, feature-of-size datum features need a material condition modifier.

YOUR TASK: *Produce a drawing for this part that includes a 2d offset section such as seen below. Create a 3d half Section that cuts through the oil hole. You also need to show a 3d wireframe or solid view of this part.*

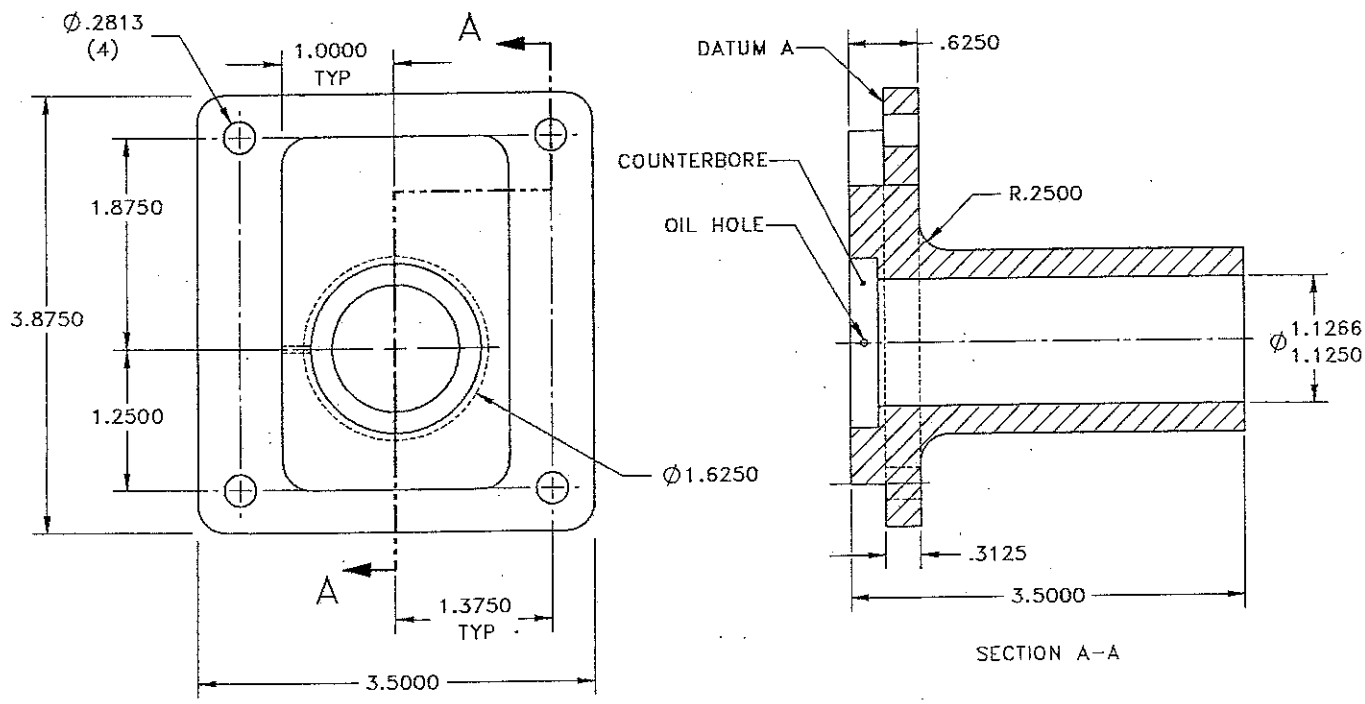

PART: 15982 Bronze Bushing:

This component of this engineering project represents a bearing surface that will also contain the passageway for oil to lubricate the shaft that turns within this part. Your drawing will provide all of the required information needed to make this part that will be inserted into the housing. The material that the Bronze Bushing is comprised of is: Bronze in its middle layer and Pb and STFE (Stainless steel reinforced Polytetrafluoroethylene) as its surface. The material is called SF-1F. The material will support speeds up to 5m/s and has a load capacity of 140N/mm squared.

The horizontal .0625 Dia hole is centered vertically in the upper flange. The outer diameter of the groove in the middle of the bushing is centered in the wall thickness and is coincident with the centerline of the vertical .0625 Dia hole. You need to calculate the proper height of the groove in order to make the groove volume be .0139 cubic inches. For this calculation use nominal size values before any tolerances are applied and calculate the complete theoretical volume without the interaction of the vertical hole. Show your calculations on this drawing - calculations may be typed or handwritten. The bore will be an RC1 fit on the shaft. The head of the bushing will be an LN2 fit to the ID of the counterbore in the Housing.

Since it is imperative for this design that the hole in the bushing line up with the hole in the housing, make sure you call that out on the assy drawing.

YOUR TASK: *Produce a drawing for this part that includes a front view, a bottom view, and both a 2d and a 3d full section view that cut through the center of the vertical oil gallery similar to what is shown below. You also need to show a 3d wireframe or solid view of this part.*

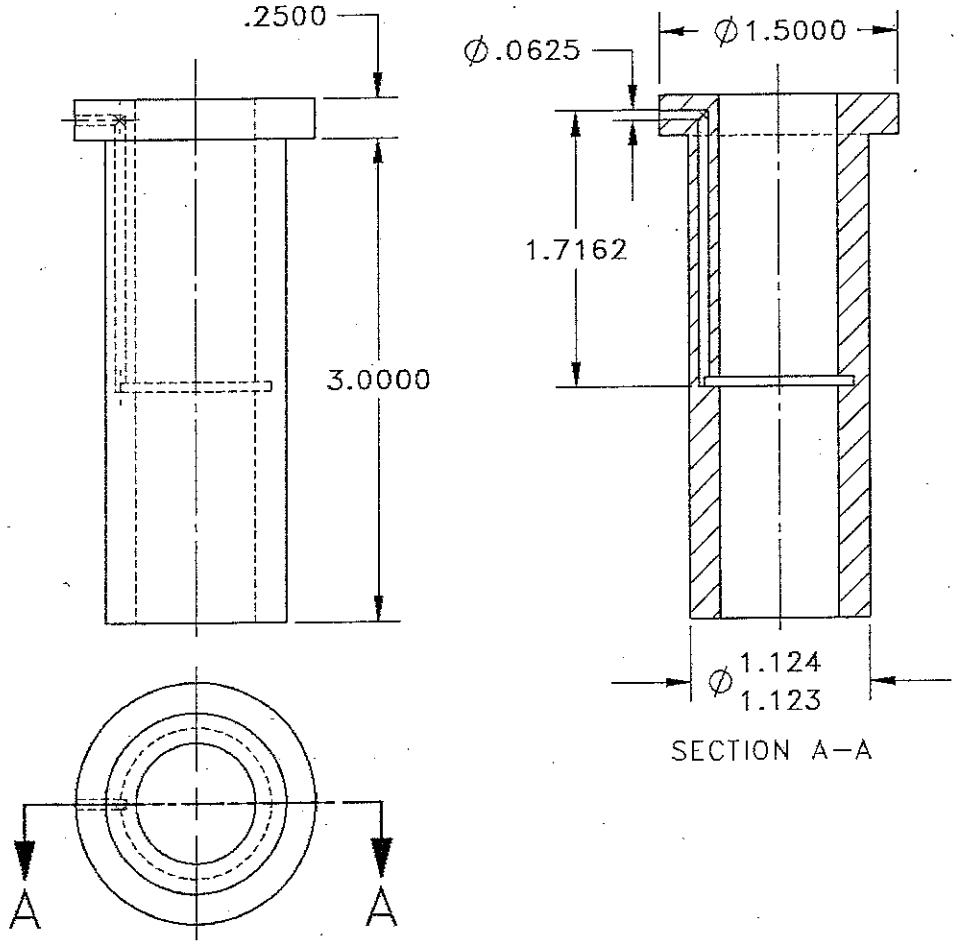

PART: 15983 Oil Seal:

This component of this engineering project represents a seal that will be pressed into the top part of the housing. This part's manufacturer is the National Seal Corporation. Oil pressure, from most automobile engines, has an operational range of 15-50 psi depending on RPM and engine warm up.

YOUR TASK: Use the attached manufacturer's drawing to create the seal for use in your assembly. Assign it a part number of 15983 in the Bill of Materials.

PART: 15984 Shaft:

This component of this engineering project represents a threaded shaft with a chrome faced bearing surface. The shaft has keyseats for the #203 Woodruff keys. Look up the key & keyseat dimensions on the attached data sheets. Each key needs to be positioned such that it is centered under its respective hub. The threaded areas, as indicated below, will accept the special hex nut as shown below. It is an ASTM A563-Grade C nut. The washer is a special washer with dimensions as shown below. The thread length on each end needs to be an appropriate length. Break the edges of the bearing surface area. Assign appropriate Bill of Materials part numbers to the nut, washer & key to be shown in the Bill of Materials on the 15980 drawing.

YOUR TASK: *Produce a drawing of the shaft that includes a front view and an end view. You also need to show a 3d wireframe or solid view of this part.*

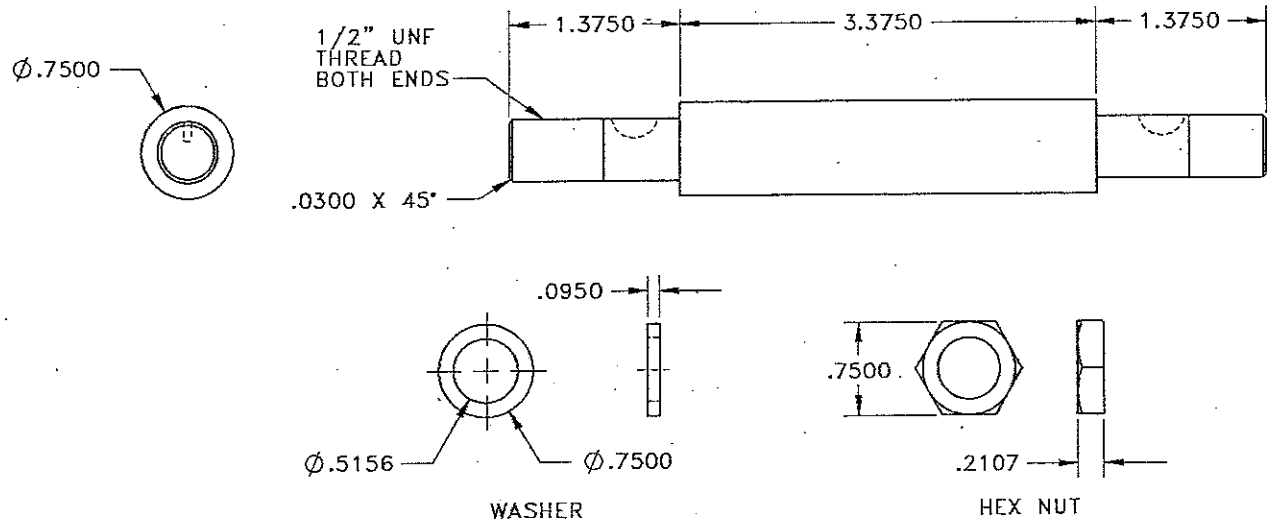

PART: 15985 Spur Gear:

This component of this engineering project represents an involute spur gear, which is driven by a mating gear inside the engine case cover. These gears have specific mathematical relationships that allow an engineer to design a gear to fit a specific gear ratio and OD requirement. The gear transmits torque into the shaft through a #203 Woodruff Key, and is secured onto the shaft with a flat washer and a nut. Standard drafting practice usually allows a gear to be shown as a simplified representation because a gear manufacturer can produce the gear if the correct information is supplied. For this contest you only need to show a simplified version.

YOUR TASK: *Produce a drawing with proper views that define the bore, the keyway, the OD, the pitch diameter and the thickness of the gear. You also need to include a chart of information as defined below. The bore diameter needs to match the shaft, and the keyway needs to be appropriate for the key as defined above. You also need to show a 3d wireframe or solid view of this part.*

10	N= the number of teeth
9.6	DP= diametric pitch
.32725	CP= circulator pitch= 3.1416/DP
1.0416	PD= pitch diameter= N/DP
1.25	OD= outside diameter= N+2/DP
.8006	RD= root diameter= DP-2D
.10416	A= addendum= 1/DP
.1205	D= dedendum= 1.157/DP
.0163541	C= clearance= 0.157/DP
.22466	WD= whole depth= A+D
.163625	CT= circular thickness= CP/2
.03125R	F= fillet
9.00	PA= pressure angle

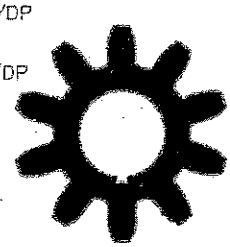

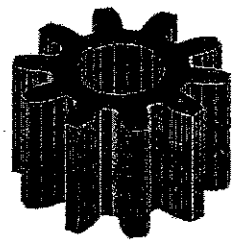

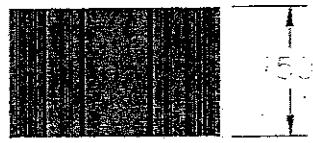

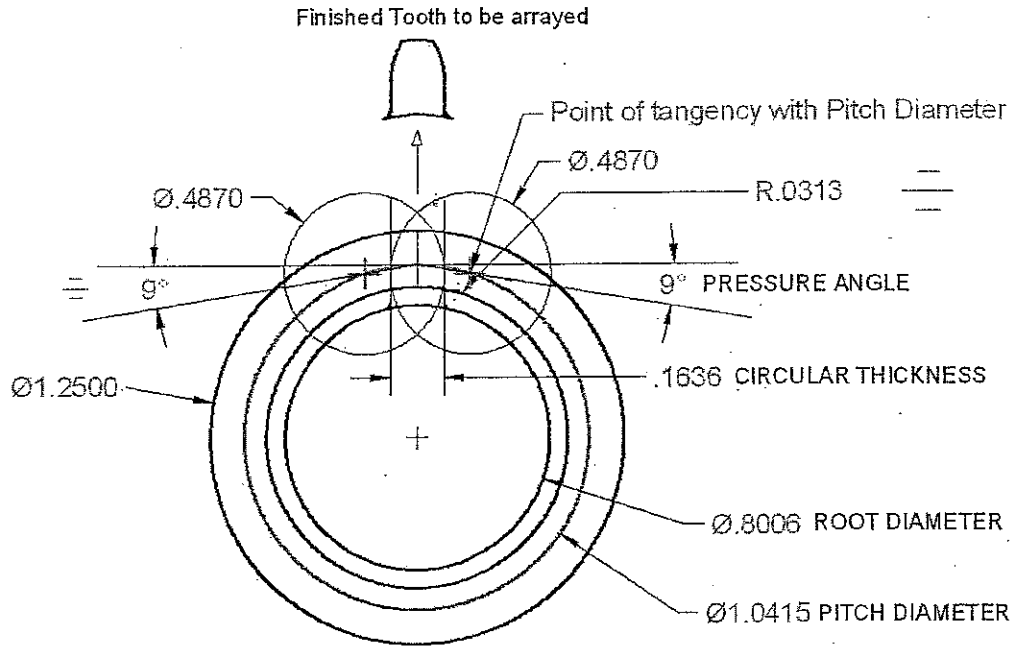

PART: 15986 V-Belt Pulley:

This component of this engineering project is a cast aluminum V-belt pulley and this part is what turns a belt to drive an auxiliary AC motor for this automobile.

YOUR TASK: *Produce a drawing that includes a front view, a side view and a full section view. The bore diameter needs to match the shaft, and the keyway needs to be appropriate for the key as defined above. You also need to show a 3d wireframe or solid view of this part.*

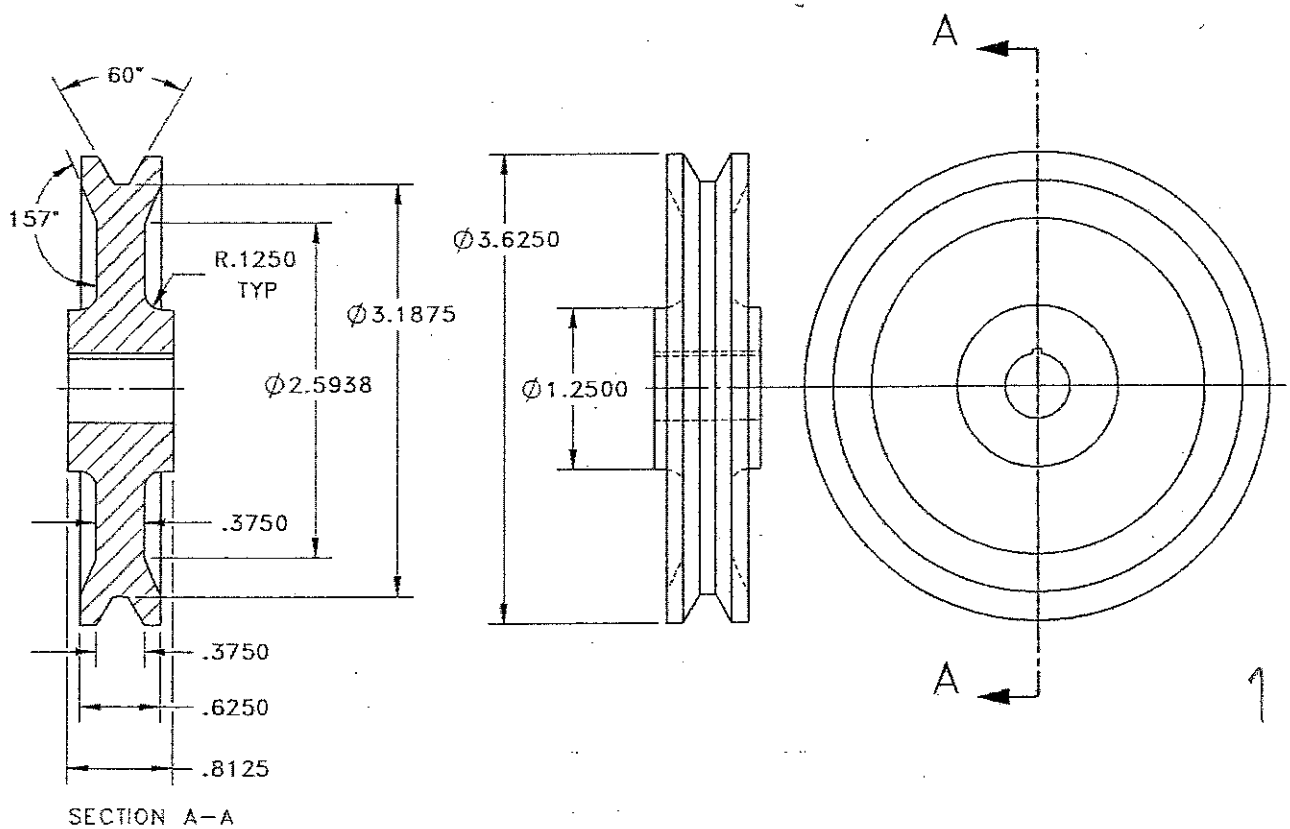

Full section for reference

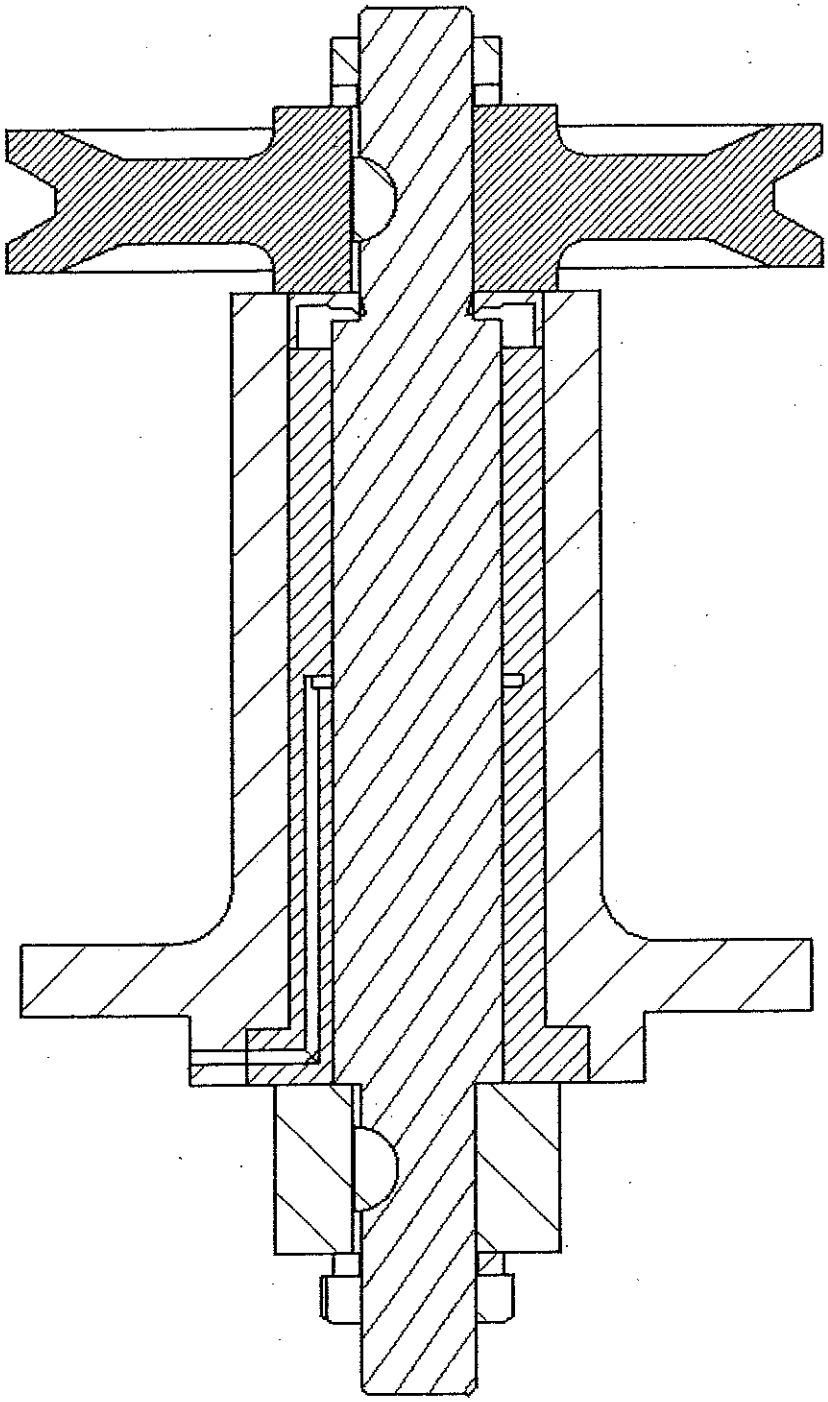

PART: 15980 HOUSING GEAR BELT ASSEMBLY:

This detailed and assembly drawing has a parts list of all of the components of the engineering project this company has been hired to complete. Below will be a series of images representing what comprises PART 15980.

YOUR TASK: *Create the detailed drawing and assembly drawing as seen below. There will be a series of snapshots of this drawing to help you complete this project. You may illustrate the exploded assembly as an Isometric Wireframe, or as a 3d model.*

Detailed and Exploded Assembly Drawing

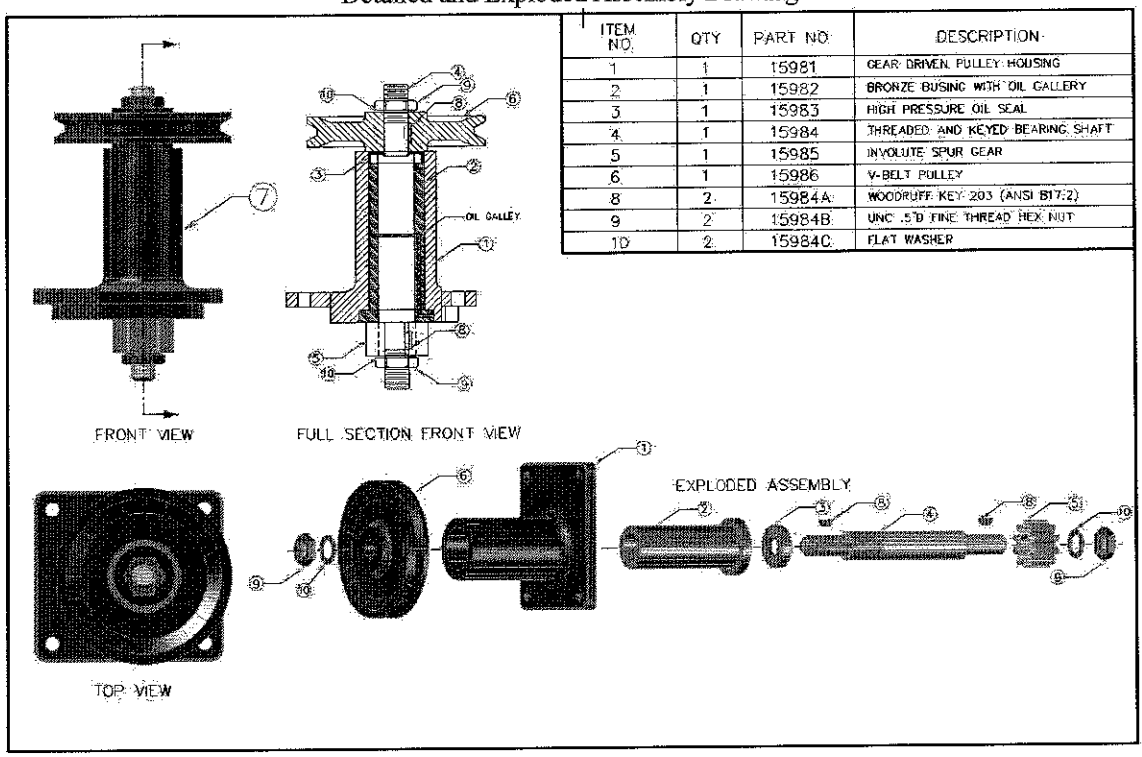

ITEM NO.	QTY	PART NO.	DESCRIPTION
1	1	15981	GEAR DRIVEN PULLEY HOUSING
2	1	15982	BRONZE BUSING WITH OIL GALLERY
3	1	15983	HIGH PRESSURE OIL SEAL
4	1	15984	THREADED AND KEYED BEARING SHAFT
5	1	15985	INVOLUTE SPUR GEAR
6	1	15986	V-BELT PULLEY
8	2	15984A	WOODRUFF KEY 203 (ANSI B17.2)
9	2	15984B	UNC .5"D FINE THREAD HEX NUT
10	2	15984C	FLAT WASHER

Full section

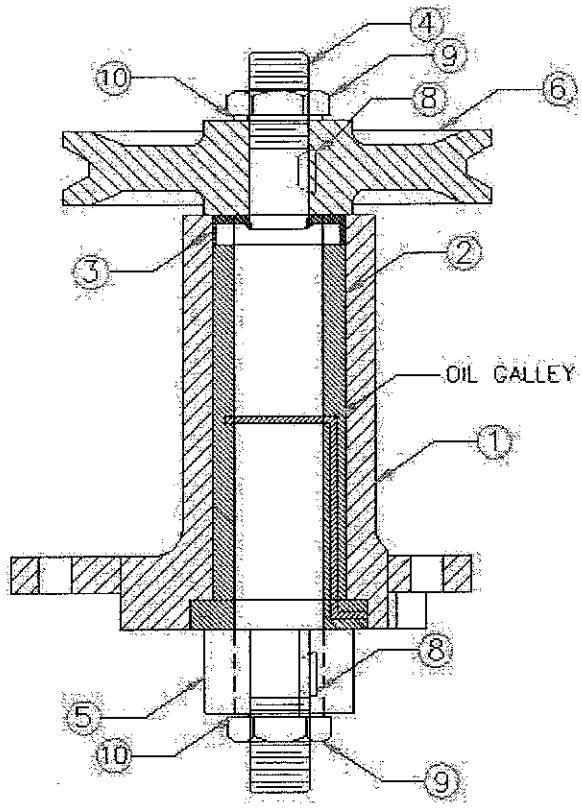

Rendered Image of Exploded Assembly

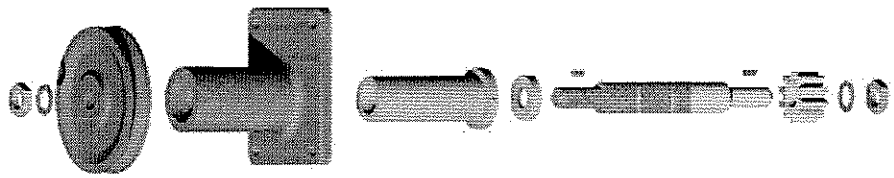

Front View Render

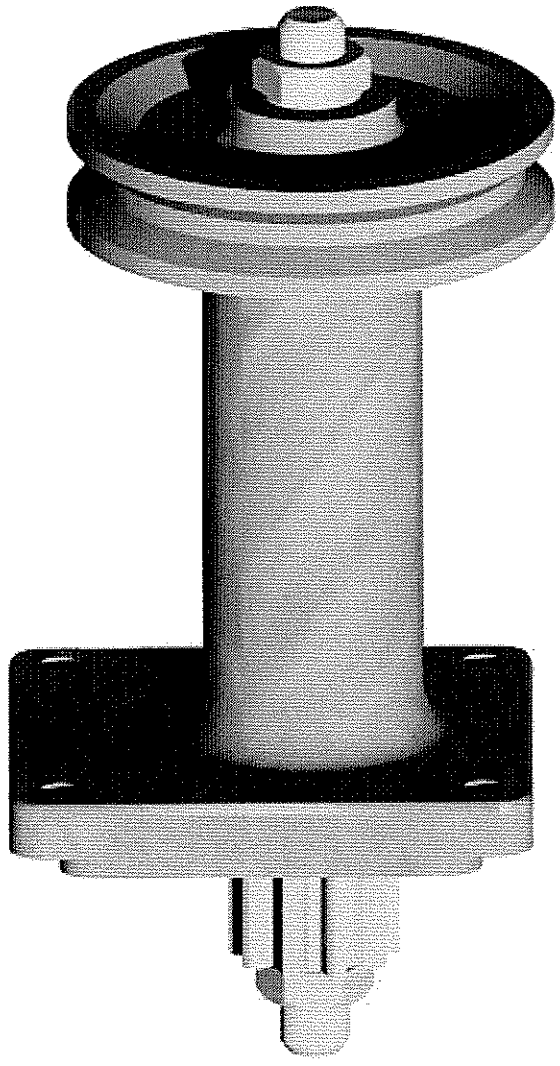

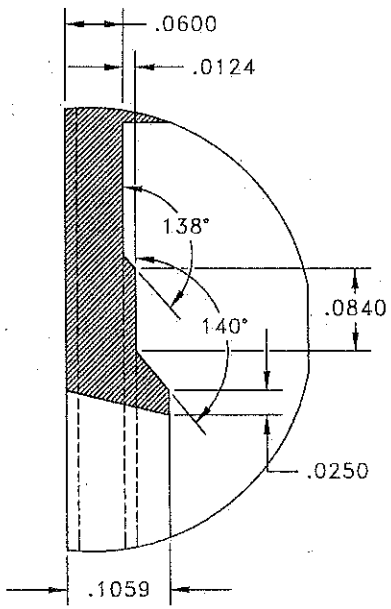

DETAIL A
SCALE 8 : 1

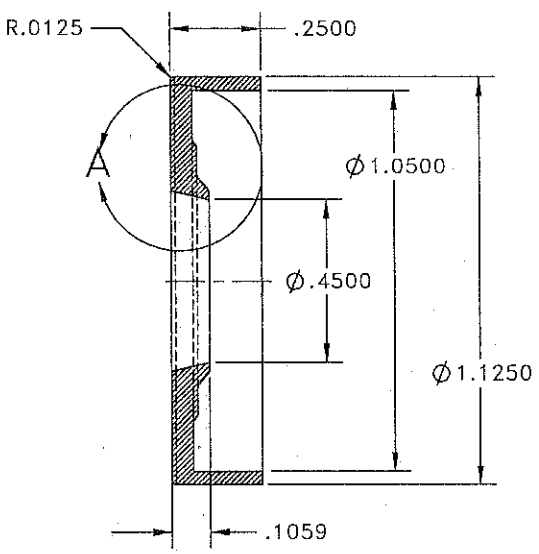

SECTION A–A

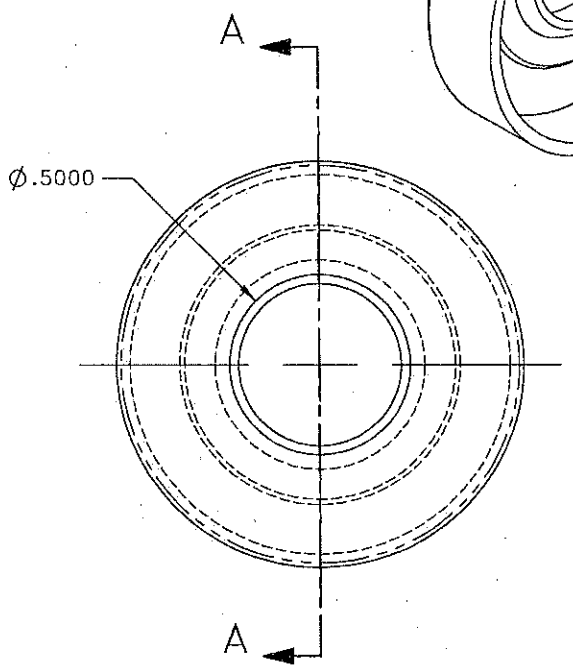

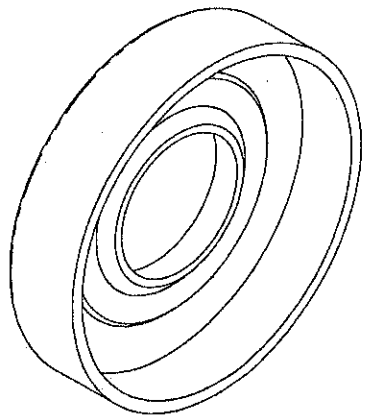

UNLESS OTHERWISE SPECIFIED DIMENSIONS ARE IN INCHES TOLERANCES ARE: FRACTIONS ±1/16 DECIMAL .XX ± .03 .XXX ± .004 ANGLES ± 1°	PRODUCT: OIL SEAL	CUSTOMER DRAWING NUMBER:
	MATERIAL: GYLON	OS–9342XX
National Oil Seal Corporation Spartansburg, TN	SCALE: 3:1	
	PART NO: OS–9342W	

Table 10. ANSI Keyseat Dimensions for Woodruff

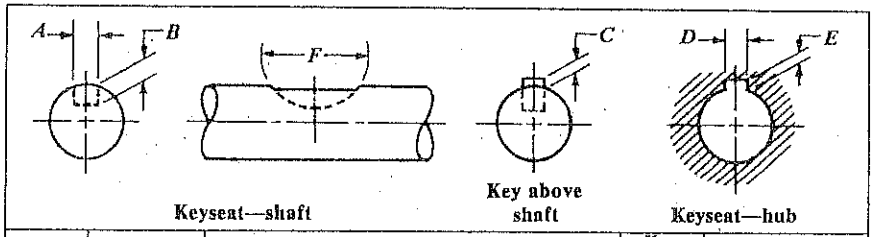

Key No.	Nominal Size Key	Keyseat—Shaft					Key-Above Shaft	Keyseat—Hub	
		Width A[a]		Depth B	Diameter F		Height C	Width D	Depth E
		Min.	Max.	+0.005 −0.000	Min.	Max.	+0.005 −0.005	+0.002 −0.000	+0.005 −0.000
202	1/16 × 1/4	0.0615	0.0630	0.0728	0.250	0.268	0.0312	0.0635	0.0372
202.5	1/16 × 5/16	0.0615	0.0630	0.1038	0.312	0.330	0.0312	0.0635	0.0372
302.5	3/32 × 5/16	0.0928	0.0943	0.0882	0.312	0.330	0.0469	0.0948	0.0529
203	1/16 × 3/8	0.0615	0.0630	0.1358	0.375	0.393	0.0312	0.0635	0.0372
303	3/32 × 3/8	0.0928	0.0943	0.1202	0.375	0.393	0.0469	0.0948	0.0529
403	1/8 × 3/8	0.1240	0.1255	0.1045	0.375	0.393	0.0625	0.1260	0.0685
204	1/16 × 1/2	0.0615	0.0630	0.1668	0.500	0.518	0.0312	0.0635	0.0372
304	3/32 × 1/2	0.0928	0.0943	0.1511	0.500	0.518	0.0469	0.0948	0.0529
404	1/8 × 1/2	0.1240	0.1255	0.1355	0.500	0.518	0.0625	0.1260	0.0685
305	3/32 × 5/8	0.0928	0.0943	0.1981	0.625	0.643	0.0469	0.0948	0.0529
405	1/8 × 5/8	0.1240	0.1255	0.1825	0.625	0.643	0.0625	0.1260	0.0685
505	5/32 × 5/8	0.1553	0.1568	0.1669	0.625	0.643	0.0781	0.1573	0.0841
605	3/16 × 5/8	0.1863	0.1880	0.1513	0.625	0.643	0.0937	0.1885	0.0997
406	1/8 × 3/4	0.1240	0.1255	0.2455	0.750	0.768	0.0625	0.1260	0.0685
506	5/32 × 3/4	0.1553	0.1568	0.2299	0.750	0.768	0.0781	0.1573	0.0841
606	3/16 × 3/4	0.1863	0.1880	0.2143	0.750	0.768	0.0937	0.1885	0.0997
806	1/4 × 3/4	0.2487	0.2505	0.1830	0.750	0.768	0.1250	0.2510	0.1310
507	5/32 × 7/8	0.1553	0.1568	0.2919	0.875	0.895	0.0781	0.1573	0.0841
607	3/16 × 7/8	0.1863	0.1880	0.2763	0.875	0.895	0.0937	0.1885	0.0997
707	7/32 × 7/8	0.2175	0.2193	0.2607	0.875	0.895	0.1093	0.2198	0.1153
807	1/4 × 7/8	0.2487	0.2505	0.2450	0.875	0.895	0.1250	0.2510	0.1310
608	3/16 × 1	0.1863	0.1880	0.3393	1.000	1.020	0.0937	0.1885	0.0997
708	7/32 × 1	0.2175	0.2193	0.3237	1.000	1.020	0.1093	0.2198	0.1153
808	1/4 × 1	0.2487	0.2505	0.3080	1.000	1.020	0.1250	0.2510	0.1310
1008	5/16 × 1	0.3111	0.3130	0.2768	1.000	1.020	0.1562	0.3135	0.1622
1208	3/8 × 1	0.3735	0.3755	0.2455	1.000	1.020	0.1875	0.3760	0.1935
609	3/16 × 1 1/8	0.1863	0.1880	0.3853	1.125	1.145	0.0937	0.1885	0.0997
709	7/32 × 1 1/8	0.2175	0.2193	0.3697	1.125	1.145	0.1093	0.2198	0.1153
809	1/4 × 1 1/8	0.2487	0.2505	0.3540	1.125	1.145	0.1250	0.2510	0.1310
1009	5/16 × 1 1/8	0.3111	0.3130	0.3228	1.125	1.145	0.1562	0.3135	0.1622
610	3/16 × 1 1/4	0.1863	0.1880	0.4483	1.250	1.273	0.0937	0.1885	0.0997
710	7/32 × 1 1/4	0.2175	0.2193	0.4327	1.250	1.273	0.1093	0.2198	0.1153
810	1/4 × 1 1/4	0.2487	0.2505	0.4170	1.250	1.273	0.1250	0.2510	0.1310
1010	5/16 × 1 1/4	0.3111	0.3130	0.3858	1.250	1.273	0.1562	0.3135	0.1622
1210	3/8 × 1 1/4	0.3735	0.3755	0.3545	1.250	1.273	0.1875	0.3760	0.1935

Table 10. *(Continued)* **ANSI Keyseat Dimensions for Woodruff**

811	1/4 × 1 1/8	0.2487	0.2505	0.4640	1.375	1.398	0.1250	0.2510	0.1310
1011	5/16 × 1 1/8	0.3111	0.3130	0.4328	1.375	1.398	0.1562	0.3135	0.1622
1211	3/8 × 1 1/8	0.3735	0.3755	0.4015	1.375	1.398	0.1875	0.3760	0.1935
812	1/4 × 1 1/2	0.2487	0.2505	0.5110	1.500	1.523	0.1250	0.2510	0.1310
1012	5/16 × 1 1/2	0.3111	0.3130	0.4798	1.500	1.523	0.1562	0.3135	0.1622
1212	3/8 × 1 1/2	0.3735	0.3755	0.4485	1.500	1.523	0.1875	0.3760	0.1935
617-1	3/16 × 2 1/8	0.1863	0.1880	0.3073	2.125	2.160	0.0937	0.1885	0.0997
817-1	1/4 × 2 1/8	0.2487	0.2505	0.2760	2.125	2.160	0.1250	0.2510	0.1310
1017-1	5/16 × 2 1/8	0.3111	0.3130	0.2448	2.125	2.160	0.1562	0.3135	0.1622
1217-1	3/8 × 2 1/8	0.3735	0.3755	0.2135	2.125	2.160	0.1875	0.3760	0.1935
617	3/16 × 2 1/8	0.1863	0.1880	0.4323	2.125	2.160	0.0937	0.1885	0.0997
817	1/4 × 2 1/8	0.2487	0.2505	0.4010	2.125	2.160	0.1250	0.2510	0.1310
1017	5/16 × 2 1/8	0.3111	0.3130	0.3698	2.125	2.160	0.1562	0.3135	0.1622
1217	3/8 × 2 1/8	0.3735	0.3755	0.3385	2.125	2.160	0.1875	0.3760	0.1935
822-1	1/4 × 2 3/4	0.2487	0.2505	0.4640	2.750	2.785	0.1250	0.2510	0.1310
1022-1	5/16 × 2 3/4	0.3111	0.3130	0.4328	2.750	2.785	0.1562	0.3135	0.1622
1222-1	3/8 × 2 3/4	0.3735	0.3755	0.4015	2.750	2.785	0.1875	0.3760	0.1935
1422-1	7/16 × 2 3/4	0.4360	0.4380	0.3703	2.750	2.785	0.2187	0.4385	0.2247
1622-1	1/2 × 2 3/4	0.4985	0.5005	0.3390	2.750	2.785	0.2500	0.5010	0.2560
822	1/4 × 2 3/4	0.2487	0.2505	0.6200	2.750	2.785	0.1250	0.2510	0.1310
1022	5/16 × 2 3/4	0.3111	0.3130	0.5888	2.750	2.785	0.1562	0.3135	0.1622
1222	3/8 × 2 3/4	0.3735	0.3755	0.5575	2.750	2.785	0.1875	0.3760	0.1935
1422	7/16 × 2 3/4	0.4360	0.4380	0.5263	2.750	2.785	0.2187	0.4385	0.2247
1622	1/2 × 2 3/4	0.4985	0.5005	0.4950	2.750	2.785	0.2500	0.5010	0.2560
1228	3/8 × 3 1/2	0.3735	0.3755	0.7455	3.500	3.535	0.1875	0.3760	0.1935
1428	7/16 × 3 1/2	0.4360	0.4380	0.7143	3.500	3.535	0.2187	0.4385	0.2247
1628	1/2 × 3 1/2	0.4985	0.5005	0.6830	3.500	3.535	0.2500	0.5010	0.2560
1828	9/16 × 3 1/2	0.5610	0.5630	0.6518	3.500	3.535	0.2812	0.5635	0.2872
2028	5/8 × 3 1/2	0.6235	0.6255	0.6205	3.500	3.535	0.3125	0.6260	0.3185
2228	11/16 × 3 1/2	0.6860	0.6880	0.5893	3.500	3.535	0.3437	0.6885	0.3497
2428	3/4 × 3 1/2	0.7485	0.7505	0.5580	3.500	3.535	0.3750	0.7510	0.3810

[a] These Width A values were set with the maximum keyseat (shaft) width as that figure which will receive a key with the greatest amount of looseness consistent with assuring the key's sticking in the keyseat (shaft). Minimum keyseat width is that figure permitting the largest shaft distortion acceptable when assembling maximum key in minimum keyseat. Dimensions A, B, C, D are taken at side intersection.

All dimensions are given in inches.

The following definitions are given in this standard:

Woodruff Key: A Remountable machinery part which, when assembled into key-seats, provides a positive means for transmitting torque between the shaft and hub.

Woodruff Key Number: An identification number by which the size of key may be readily determined.

Woodruff Keyseat—Shaft: The circular pocket in which the key is retained.

Woodruff Keyseat—Hub: An axially located rectangular groove in a hub. (This has been referred to as a keyway.)

Woodruff Keyseat Milling Cutter: An arbor type or shank type milling cutter normally used for milling Woodruff keyseats in shafts.

Table 8. ANSI Standard Woodruff Keys *ANSI B17.2-1967 (R1998)*

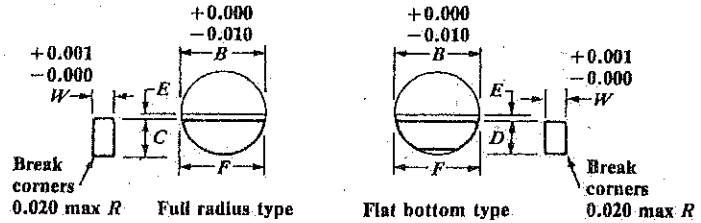

Key No.	Nominal Key Size W X B	Actual Length F +0.000 −0.010	Height of Key C Max.	C Min.	D Max.	D Min.	Distance Below Center E
202	1/16 × 1/4	0.248	0.109	0.104	0.109	0.104	1/64
202.5	1/16 × 5/16	0.311	0.140	0.135	0.140	0.135	1/64
302.5	3/32 × 5/16	0.311	0.140	0.135	0.140	0.135	1/64
203	1/16 × 3/8	0.374	0.172	0.167	0.172	0.167	1/64
303	3/32 × 3/8	0.374	0.172	0.167	0.172	0.167	1/64
403	1/8 × 3/8	0.374	0.172	0.167	0.172	0.167	1/64
204	1/16 × 1/2	0.491	0.203	0.198	0.194	0.188	3/64
304	3/32 × 1/2	0.491	0.203	0.198	0.194	0.188	3/64
404	1/8 × 1/2	0.491	0.203	0.198	0.194	0.188	3/64
305	3/32 × 5/8	0.612	0.250	0.245	0.240	0.234	1/16
405	1/8 × 5/8	0.612	0.250	0.245	0.240	0.234	1/16
505	5/32 × 5/8	0.612	0.250	0.245	0.240	0.234	1/16
605	3/16 × 5/8	0.612	0.250	0.245	0.240	0.234	1/16
406	1/8 × 3/4	0.740	0.313	0.308	0.303	0.297	1/16
506	5/32 × 3/4	0.740	0.313	0.308	0.303	0.297	1/16
606	3/16 × 3/4	0.740	0.313	0.308	0.303	0.297	1/16
806	1/4 × 3/4	0.740	0.313	0.308	0.303	0.297	1/16
507	5/32 × 7/8	0.866	0.375	0.370	0.365	0.359	1/16
607	3/16 × 7/8	0.866	0.375	0.370	0.365	0.359	1/16
707	7/32 × 7/8	0.866	0.375	0.370	0.365	0.359	1/16
807	1/4 × 7/8	0.866	0.375	0.370	0.365	0.359	1/16
608	3/16 × 1	0.992	0.438	0.433	0.428	0.422	1/16
708	7/32 × 1	0.992	0.438	0.433	0.428	0.422	1/16
808	1/4 × 1	0.992	0.438	0.433	0.428	0.422	1/16
1008	5/16 × 1	0.992	0.438	0.433	0.428	0.422	1/16
1208	3/8 × 1	0.992	0.438	0.433	0.428	0.422	1/16
609	3/16 × 1 1/8	1.114	0.484	0.479	0.475	0.469	5/64
709	7/32 × 1 1/8	1.114	0.484	0.479	0.475	0.469	5/64
809	1/4 × 1 1/8	1.114	0.484	0.479	0.475	0.469	5/64
1009	5/16 × 1 1/8	1.114	0.484	0.479	0.475	0.469	5/64
610	3/16 × 1 1/4	1.240	0.547	0.542	0.537	0.531	5/64
710	7/32 × 1 1/4	1.240	0.547	0.542	0.537	0.531	5/64
810	1/4 × 1 1/4	1.240	0.547	0.542	0.537	0.531	5/64
1010	5/16 × 1 1/4	1.240	0.547	0.542	0.537	0.531	5/64
1210	3/8 × 1 1/4	1.240	0.547	0.542	0.537	0.531	5/64
811	1/4 × 1 3/8	1.362	0.594	0.589	0.584	0.578	3/32
1011	5/16 × 1 3/8	1.362	0.594	0.589	0.584	0.578	3/32
1211	3/8 × 1 3/8	1.362	0.594	0.589	0.584	0.578	3/32
812	1/4 × 1 1/2	1.484	0.641	0.636	0.631	0.625	7/64
1012	5/16 × 1 1/2	1.484	0.641	0.636	0.631	0.625	7/64
1212	3/8 × 1 1/2	1.484	0.641	0.636	0.631	0.625	7/64

All dimensions are given in inches.

The Key numbers indicate normal key dimensions. The last two digits give the nominal diameter *B* in eighths of an inch and the digits preceding the last two give the nominal width *W* in thirty-seconds of an inch.

Table 9. ANSI Standard Woodruff Keys *ANSI B17.2-1967 (R1998)*

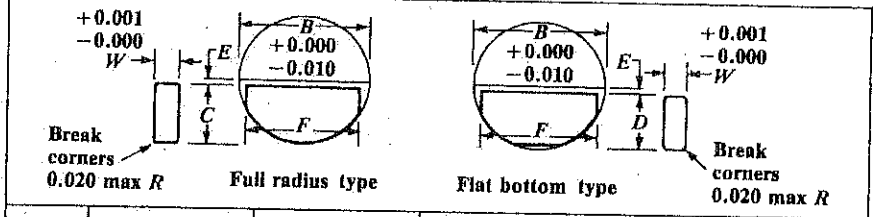

Key No.	Nominal Key Size W × B	Actual Length F +0.000 −0.010	Height of Key C Max.	C Min.	D Max.	D Min.	Distance Below Center E
617-1	3/16 × 2 1/8	1.380	0.406	0.401	0.396	0.390	21/32
817-1	1/4 × 2 1/8	1.380	0.406	0.401	0.396	0.390	21/32
1017-1	5/16 × 2 1/8	1.380	0.406	0.401	0.396	0.390	21/32
1217-1	3/8 × 2 1/8	1.380	0.406	0.401	0.396	0.390	21/32
617	3/16 × 2 1/8	1.723	0.531	0.526	0.521	0.515	17/32
817	1/4 × 2 1/8	1.723	0.531	0.526	0.521	0.515	17/32
1017	5/16 × 2 1/8	1.723	0.531	0.526	0.521	0.515	17/32
1217	3/8 × 2 1/8	1.723	0.531	0.526	0.521	0.515	17/32
822-1	1/4 × 2 3/4	2.000	0.594	0.589	0.584	0.578	25/32
1022-1	5/16 × 2 3/4	2.000	0.594	0.589	0.584	0.578	25/32
1222-1	3/8 × 2 3/4	2.000	0.594	0.589	0.584	0.578	25/32
1422-1	7/16 × 2 3/4	2.000	0.594	0.589	0.584	0.578	25/32
1622-1	1/2 × 2 3/4	2.000	0.594	0.589	0.584	0.578	25/32
822	1/4 × 2 3/4	2.317	0.750	0.745	0.740	0.734	5/8
1022	5/16 × 2 3/4	2.317	0.750	0.745	0.740	0.734	5/8
1222	3/8 × 2 3/4	2.317	0.750	0.745	0.740	0.734	5/8
1422	7/16 × 2 3/4	2.317	0.750	0.745	0.740	0.734	5/8
1622	1/2 × 2 3/4	2.317	0.750	0.745	0.740	0.734	5/8
1228	3/8 × 3 1/2	2.880	0.938	0.933	0.928	0.922	13/16
1428	7/16 × 3 1/2	2.880	0.938	0.933	0.928	0.922	13/16
1628	1/2 × 3 1/2	2.880	0.938	0.933	0.928	0.922	13/16
1828	9/16 × 3 1/2	2.880	0.938	0.933	0.928	0.922	13/16
2028	5/8 × 3 1/2	2.880	0.938	0.933	0.928	0.922	13/16
2228	11/16 × 3 1/2	2.880	0.938	0.933	0.928	0.922	13/16
2428	3/4 × 3 1/2	2.880	0.938	0.933	0.928	0.922	13/16

All dimensions are given in inches.

The key numbers indicate nominal key dimensions. The last two digits give the nominal diameter *B* in eighths of an inch and the digits preceding the last two give the nominal width *W* in thirty-seconds of an inch.

The key numbers with the −1 designation, while representing the nominal key size have a shorter length *F* and due to a greater distance below center *E* are less in height than the keys of the same number without the −1 designation.

Table 10. ANSI Keyseat Dimensions for Woodruff

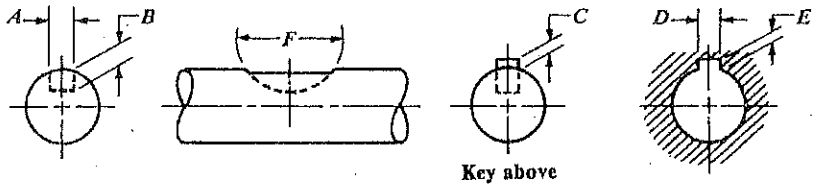

Keyseat—shaft | Key above shaft | Keyseat—hub

Key No.	Nominal Size Key	Keyseat—Shaft					Key-Above Shaft	Keyseat—Hub	
		Width A[a]		Depth B	Diameter F		Height C	Width D	Depth E
		Min.	Max.	+0.005 −0.000	Min.	Max.	+0.005 −0.005	+0.002 −0.000	+0.005 −0.000
202	1/16 × 1/4	0.0615	0.0630	0.0728	0.250	0.268	0.0312	0.0635	0.0372
202.5	1/16 × 5/16	0.0615	0.0630	0.1038	0.312	0.330	0.0312	0.0635	0.0372
302.5	3/32 × 5/16	0.0928	0.0943	0.0882	0.312	0.330	0.0469	0.0948	0.0529
203	1/16 × 3/8	0.0615	0.0630	0.1358	0.375	0.393	0.0312	0.0635	0.0372
303	3/32 × 3/8	0.0928	0.0943	0.1202	0.375	0.393	0.0469	0.0948	0.0529
403	1/8 × 3/8	0.1240	0.1255	0.1045	0.375	0.393	0.0625	0.1260	0.0685
204	1/16 × 1/2	0.0615	0.0630	0.1668	0.500	0.518	0.0312	0.0635	0.0372
304	3/32 × 1/2	0.0928	0.0943	0.1511	0.500	0.518	0.0469	0.0948	0.0529
404	1/8 × 1/2	0.1240	0.1255	0.1355	0.500	0.518	0.0625	0.1260	0.0685
305	3/32 × 5/8	0.0928	0.0943	0.1981	0.625	0.643	0.0469	0.0948	0.0529
405	1/8 × 5/8	0.1240	0.1255	0.1825	0.625	0.643	0.0625	0.1260	0.0685
505	5/32 × 5/8	0.1553	0.1568	0.1669	0.625	0.643	0.0781	0.1573	0.0841
605	3/16 × 5/8	0.1863	0.1880	0.1513	0.625	0.643	0.0937	0.1885	0.0997
406	1/8 × 3/4	0.1240	0.1255	0.2455	0.750	0.768	0.0625	0.1260	0.0685
506	5/32 × 3/4	0.1553	0.1568	0.2299	0.750	0.768	0.0781	0.1573	0.0841
606	3/16 × 3/4	0.1863	0.1880	0.2143	0.750	0.768	0.0937	0.1885	0.0997
806	1/4 × 3/4	0.2487	0.2505	0.1830	0.750	0.768	0.1250	0.2510	0.1310
507	5/32 × 7/8	0.1553	0.1568	0.2919	0.875	0.895	0.0781	0.1573	0.0841
607	3/16 × 7/8	0.1863	0.1880	0.2763	0.875	0.895	0.0937	0.1885	0.0997
707	7/32 × 7/8	0.2175	0.2193	0.2607	0.875	0.895	0.1093	0.2198	0.1153
807	1/4 × 7/8	0.2487	0.2505	0.2450	0.875	0.895	0.1250	0.2510	0.1310
608	3/16 × 1	0.1863	0.1880	0.3393	1.000	1.020	0.0937	0.1885	0.0997
708	7/32 × 1	0.2175	0.2193	0.3237	1.000	1.020	0.1093	0.2198	0.1153
808	1/4 × 1	0.2487	0.2505	0.3080	1.000	1.020	0.1250	0.2510	0.1310
1008	5/16 × 1	0.3111	0.3130	0.2768	1.000	1.020	0.1562	0.3135	0.1622
1208	3/8 × 1	0.3735	0.3755	0.2455	1.000	1.020	0.1875	0.3760	0.1935
609	3/16 × 1 1/8	0.1863	0.1880	0.3853	1.125	1.145	0.0937	0.1885	0.0997
709	7/32 × 1 1/8	0.2175	0.2193	0.3697	1.125	1.145	0.1093	0.2198	0.1153
809	1/4 × 1 1/8	0.2487	0.2505	0.3540	1.125	1.145	0.1250	0.2510	0.1310
1009	5/16 × 1 1/8	0.3111	0.3130	0.3228	1.125	1.145	0.1562	0.3135	0.1622
610	3/16 × 1 1/4	0.1863	0.1880	0.4483	1.250	1.273	0.0937	0.1885	0.0997
710	7/32 × 1 1/4	0.2175	0.2193	0.4327	1.250	1.273	0.1093	0.2198	0.1153
810	1/4 × 1 1/4	0.2487	0.2505	0.4170	1.250	1.273	0.1250	0.2510	0.1310
1010	5/16 × 1 1/4	0.3111	0.3130	0.3858	1.250	1.273	0.1562	0.3135	0.1622
1210	3/8 × 1 1/4	0.3735	0.3755	0.3545	1.250	1.273	0.1875	0.3760	0.1935

Table 10. *(Continued)* **ANSI Keyseat Dimensions for Woodruff**

811	1/4 × 1 1/8	0.2487	0.2505	0.4640	1.375	1.398	0.1250	0.2510	0.1310
1011	5/16 × 1 3/8	0.3111	0.3130	0.4328	1.375	1.398	0.1562	0.3135	0.1622
1211	3/8 × 1 3/8	0.3735	0.3755	0.4015	1.375	1.398	0.1875	0.3760	0.1935
812	1/4 × 1 1/2	0.2487	0.2505	0.5110	1.500	1.523	0.1250	0.2510	0.1310
1012	5/16 × 1 1/2	0.3111	0.3130	0.4798	1.500	1.523	0.1562	0.3135	0.1622
1212	3/8 × 1 1/2	0.3735	0.3755	0.4485	1.500	1.523	0.1875	0.3760	0.1935
617-1	3/16 × 2 1/8	0.1863	0.1880	0.3073	2.125	2.160	0.0937	0.1885	0.0997
817-1	1/4 × 2 1/8	0.2487	0.2505	0.2760	2.125	2.160	0.1250	0.2510	0.1310
1017-1	5/16 × 2 1/8	0.3111	0.3130	0.2448	2.125	2.160	0.1562	0.3135	0.1622
1217-1	3/8 × 2 1/8	0.3735	0.3755	0.2135	2.125	2.160	0.1875	0.3760	0.1935
617	3/16 × 2 1/8	0.1863	0.1880	0.4323	2.125	2.160	0.0937	0.1885	0.0997
817	1/4 × 2 1/8	0.2487	0.2505	0.4010	2.125	2.160	0.1250	0.2510	0.1310
1017	5/16 × 2 1/8	0.3111	0.3130	0.3698	2.125	2.160	0.1562	0.3135	0.1622
1217	3/8 × 2 1/8	0.3735	0.3755	0.3385	2.125	2.160	0.1875	0.3760	0.1935
822-1	1/4 × 2 3/4	0.2487	0.2505	0.4640	2.750	2.785	0.1250	0.2510	0.1310
1022-1	5/16 × 2 3/4	0.3111	0.3130	0.4328	2.750	2.785	0.1562	0.3135	0.1622
1222-1	3/8 × 2 3/4	0.3735	0.3755	0.4015	2.750	2.785	0.1875	0.3760	0.1935
1422-1	7/16 × 2 3/4	0.4360	0.4380	0.3703	2.750	2.785	0.2187	0.4385	0.2247
1622-1	1/2 × 2 3/4	0.4985	0.5005	0.3390	2.750	2.785	0.2500	0.5010	0.2560
822	1/4 × 2 3/4	0.2487	0.2505	0.6200	2.750	2.785	0.1250	0.2510	0.1310
1022	5/16 × 2 3/4	0.3111	0.3130	0.5888	2.750	2.785	0.1562	0.3135	0.1622
1222	3/8 × 2 3/4	0.3735	0.3755	0.5575	2.750	2.785	0.1875	0.3760	0.1935
1422	7/16 × 2 3/4	0.4360	0.4380	0.5263	2.750	2.785	0.2187	0.4385	0.2247
1622	1/2 × 2 3/4	0.4985	0.5005	0.4950	2.750	2.785	0.2500	0.5010	0.2560
1228	3/8 × 3 1/2	0.3735	0.3755	0.7455	3.500	3.535	0.1875	0.3760	0.1935
1428	7/16 × 3 1/2	0.4360	0.4380	0.7143	3.500	3.535	0.2187	0.4385	0.2247
1628	1/2 × 3 1/2	0.4985	0.5005	0.6830	3.500	3.535	0.2500	0.5010	0.2560
1828	9/16 × 3 1/2	0.5610	0.5630	0.6518	3.500	3.535	0.2812	0.5635	0.2872
2028	5/8 × 3 1/2	0.6235	0.6255	0.6205	3.500	3.535	0.3125	0.6260	0.3185
2228	11/16 × 3 1/2	0.6860	0.6880	0.5893	3.500	3.535	0.3437	0.6885	0.3497
2428	3/4 × 3 1/2	0.7485	0.7505	0.5580	3.500	3.535	0.3750	0.7510	0.3810

[a] These Width A values were set with the maximum keyseat (shaft) width as that figure which will receive a key with the greatest amount of looseness consistent with assuring the key's sticking in the keyseat (shaft). Minimum keyseat width is that figure permitting the largest shaft distortion acceptable when assembling maximum key in minimum keyseat. Dimensions A, B, C, D are taken at side intersection.

All dimensions are given in inches.

The following definitions are given in this standard:

Woodruff Key: A Remountable machinery part which, when assembled into key-seats, provides a positive means for transmitting torque between the shaft and hub.

Woodruff Key Number: An identification number by which the size of key may be readily determined.

Woodruff Keyseat—Shaft: The circular pocket in which the key is retained.

Woodruff Keyseat—Hub: An axially located rectangular groove in a hub. (This has been referred to as a keyway.)

Woodruff Keyseat Milling Cutter: An arbor type or shank type milling cutter normally used for milling Woodruff keyseats in shafts.

P.O. Box 3000
Leesburg, VA 20177-0300
Voice: (703) 777-8810
Fax: (703) 777-8999

Memo:

Date: June 25, 2009
To: Technical Drafting Contestants
From: Technical Drafting Committee
Re: Housing for Gear Driven Pulley

Overview:

An Automobile Manufacturer has requested from our company the design of a front cover housing on an engine in order to provide an additional pulley to drive an AC motor. This company has provided pertinent details regarding the housing, pulley diameter and V-belt type requirements, as well as the gear specifications. This company requires that the recessed base of the housing have a hole drilled for oil to pass through the gallery of the housing to align itself with an existing oil feed hole in the engine front cover. The details of the' hole placement will be provided in their documentation. The drawings below are required to complete this Housing Assembly.

1. An 3d or Isometric drawing of the Housing for a Gear Driven Pulley, oriented in Isometric Perspective to show all external parts. In addition on this drawing there will be illustrated a Full Cross-section with a complete parts list. A Half Section will be used when illustrating the Isometric or 3d drawing to show the central oil galley hole that the housing is being lubricated by engine oil.

2. A detailed drawing of the Gear Driven Pulley Housing with an offset section and a 3d or Isometric Illustration of the housing.

3. A detailed drawing of a bronze bearing with an oil gallery. This drawing will show a full section and a 3d or Isometric View of this part.

4. A detailed drawing of an oil seal used at the top of the housing. This drawing will be illustrated in 3d or Isometric View.

5. A detailed drawing of a shaft threaded at both ends with the use of a woodruff key to lock the pulley and gear into place. An additional view on this drawing will Illustrate a 3d or isometric view of this shaft.

6. A detailed drawing of an Involute spur gear, with an additional 3d or Isometric view of this part.

7. A detailed drawing of a pulley, designed for a keyed shaft. This drawing will contain a 3d or Isometric View of this part.

8. The part numbers to be used are:

   - 15980 Housing/Gear-belt Assembly
   - 15981 Aluminum Housing
   - 15982 Bronze busing
   - 15983 High Pressure oil seal
   - 15984 Threaded and keyed shaft
   - 15984a Hex nuts
   - 15984b flat washers
   - 15984c woodruff keys
   - 15985 Involute Spur Gear
   - 15986 V-Belt Pulley

General Considerations:

- All dimensions in this documentation are given in inches unless otherwise noted.
- All sealing surfaces are to have a surface finish of 32 micro inches; top and bottom of housing, seal insert areas, inside V of pulley and gear teeth mating surfaces. All other surfaces as in the housing can have a finish of 63 micro inches.

- Show all fasteners as a simplified version; it is not a rquirement to illustrate 3d threads
- The fillet on the Pump housing barrel is .25R
- All parts are to be a slide fit with a tolerance of .005-.0025, + or - .001
- Hex bolts are not illustrated in the assembly but are .25D x .75 x 12 TPI, with a.3125 tolerance shoulder.

Drawing Requirements Summary:

Skills USA 6/25/2009

Drawing	Quantity	Type	Description
15980	1	atail/Assem	Housing Gear/Pulley-Assembly
15981	1	Detail	Gear Driven Pulley Housing
15982	1	Detail	Bronze bushing with oil gallery
15983	1	Detail	High Pressure Oil Seal
15984	1	Detail	Threaded and keyed bearing shaft
15985	1	Detail	Involute Spur Gear (keyed shaft)
15986	1	Detail	V-belt pulley (keyed shaft)
15984a	2	Detail	Woodruff Key (1/16" x 1/16")
15984b	2	Detail	UNC .5D Fine Thread Hex Nut
15984c	2	Detail	Flat Washer

PART: 15981 Gear Driven Pulley Housing:

This is the main component of this engineering project that will support a bearing, a shaft and have a oil galley that will align itself with an exiting oil feed from this particular automobile engine. The housing will be cast with A360; a Die Cast Aluminum Alloy with a Density weight of .095 Lbs/cubic inch. Below is the 2 primary detailed drawings to describe this part and sufficient for you to create an Isometric or 3d Illustration of this Offset Section. The purpose behind this section is to reveal the location of the oil holes in the top and section views. Below these views are exploded illustrations of the oil gallery holes in both views. YOUR TASK: *Draw the below detailed drawings with a 2d offset section; and create either an Isometric wireframe or 3d of the part as an Half Section.*

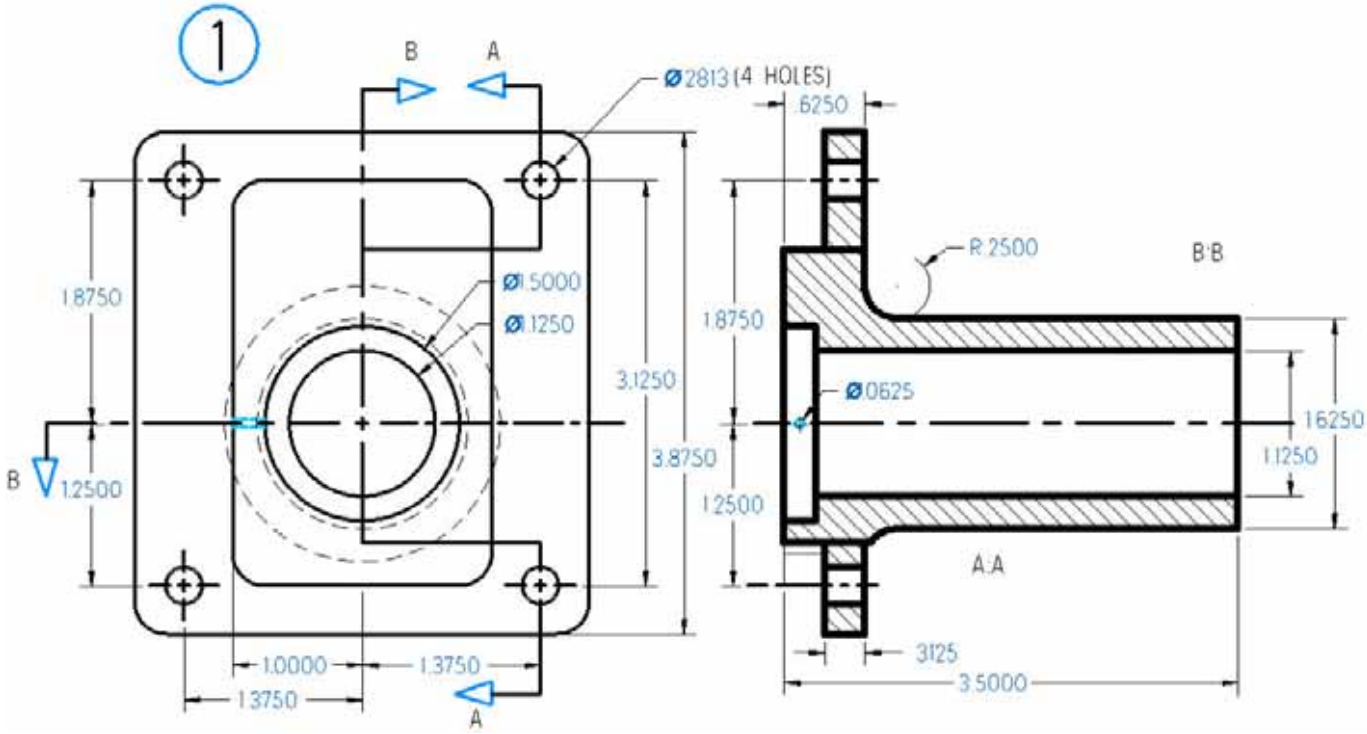

PART: 15982 Bronze Bushing with Oil Galley:

This component of this engineering project represents a bearing surface that will be also the passageway for oil to lubricate the shaft that turns within this part. Your drawing and its accuracy will provide a manufacturer of bronze bearing bushings to make the part that will be inserted into the housing. The material that the Bronze Bearing is comprised of is: Bronze in its middle layer and Pb and STFE (Stainless steel reinforced Polytetrafluoroethylene) as its surface. The Material is called SF-1F. The material will support speeds up to 5m/s and has a load capacity of 140N/mm squared. Below is a detailed drawing of this part.
YOUR TASK: *Draw the below detailed drawings and create either an Isometric wireframe or 3d of the part as a Full Section.*

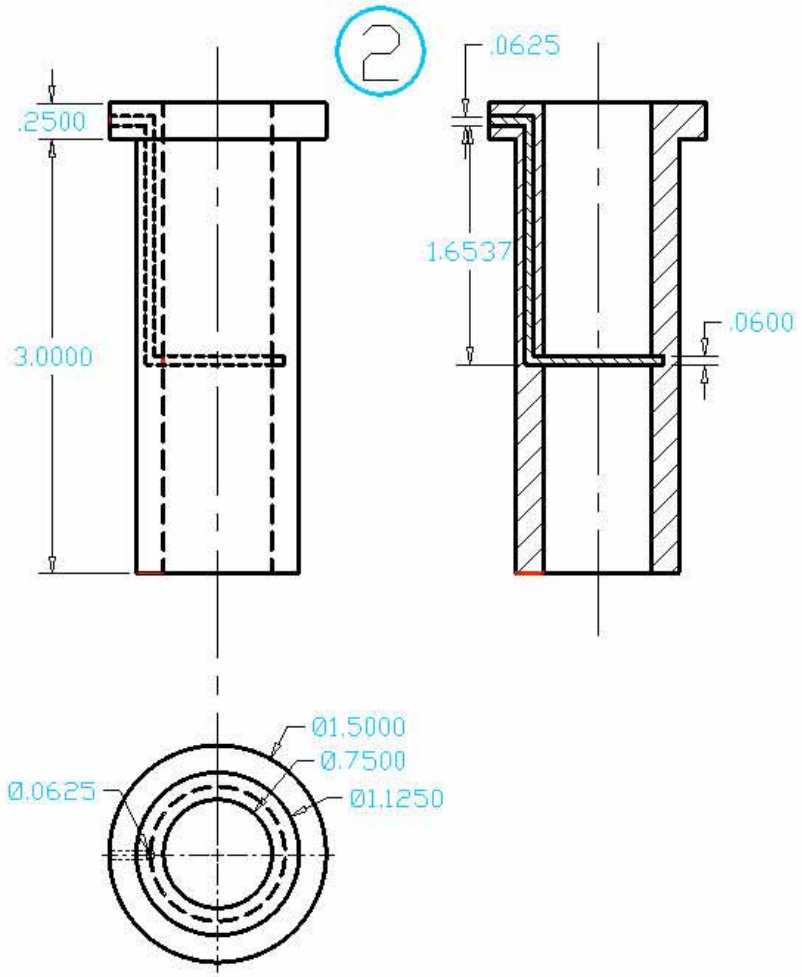

Exploded Top view of the Bushing

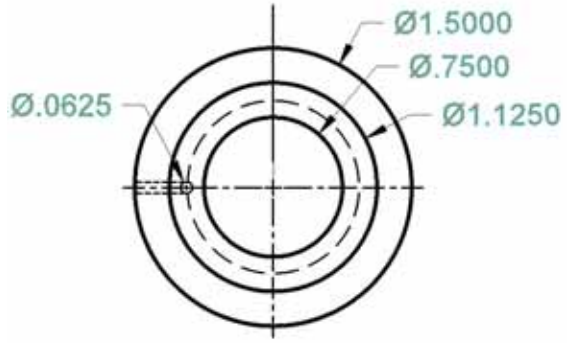

PART: 15983 High Pressure Oil Seal:

This component of this engineering project represents a seal that will be pressed into the top part of the housing after the Bronze busing is inserted. This part manufacturer is the National Seal Corporation. Oil pressure, from most automobile engines has an operational range of 15-50 psi depending on RPM and engine warm up. The housing was engineered to accept this oil seal as well as the shaft machined to spin within its rubber/plastic inner seal.

YOUR TASK: *Draw the below detailed drawings and create either an Isometric wireframe or 3d of the part as a Full Section.*

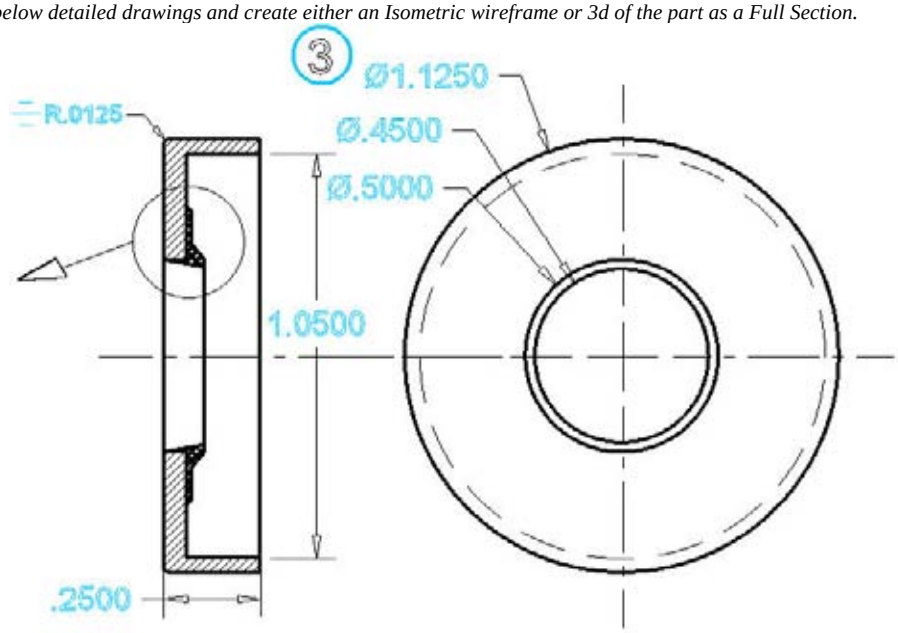

Callout of the Section View of the seal

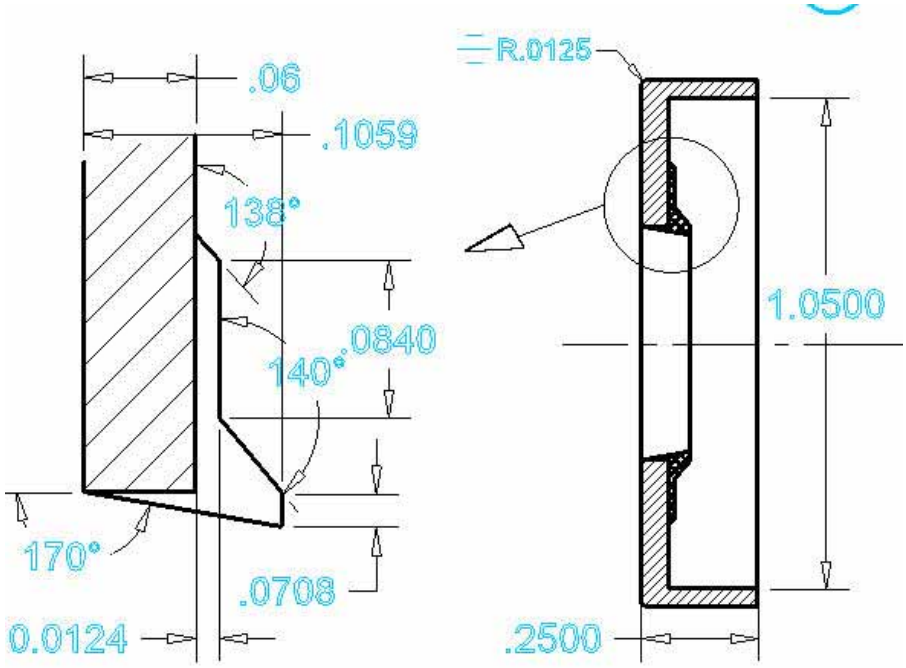

PART: 15984 Threaded Chrome faced Bearing Shaft:

This component of this engineering project represents a threaded shaft with a chrome faced bearing surface. The shaft has recessed area for a woodruff key, which will lock into place the pulley and spur gear. The threaded area as indicated below will accept a Hex Nut grade 8 composition.

YOUR TASK: *Create the detailed drawings below and an Isometric wireframe illustration and/or a 3d model of these parts illustrated in Isometric perspective.*

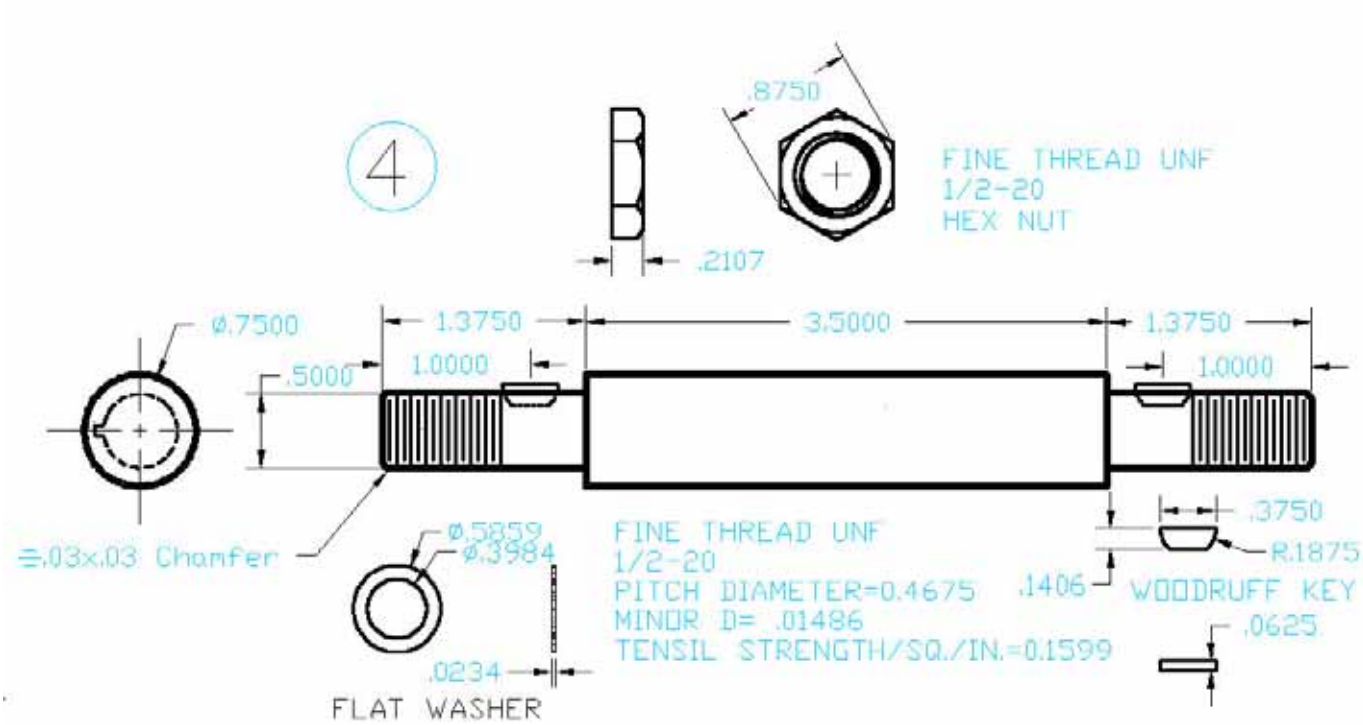

PART: 15985 Involute Spear Gear:

This component of this engineering project represents an involute spur gear, which is driven by another inside an engine case cover. These gears have specific mathematical relationships that allow an engineer to design a gear to fit a specific gear ratio and OD requirement. The spur gear is locked into position on the shaft by a woodruff key and secured with a flat washer and fine thread nut.

YOUR TASK: *Create the detailed drawings below and an Isometric wireframe illustration and/or a 3d model of these parts illustrated in Isometric perspective. Below is a guided illustration on how to used the gear specification*

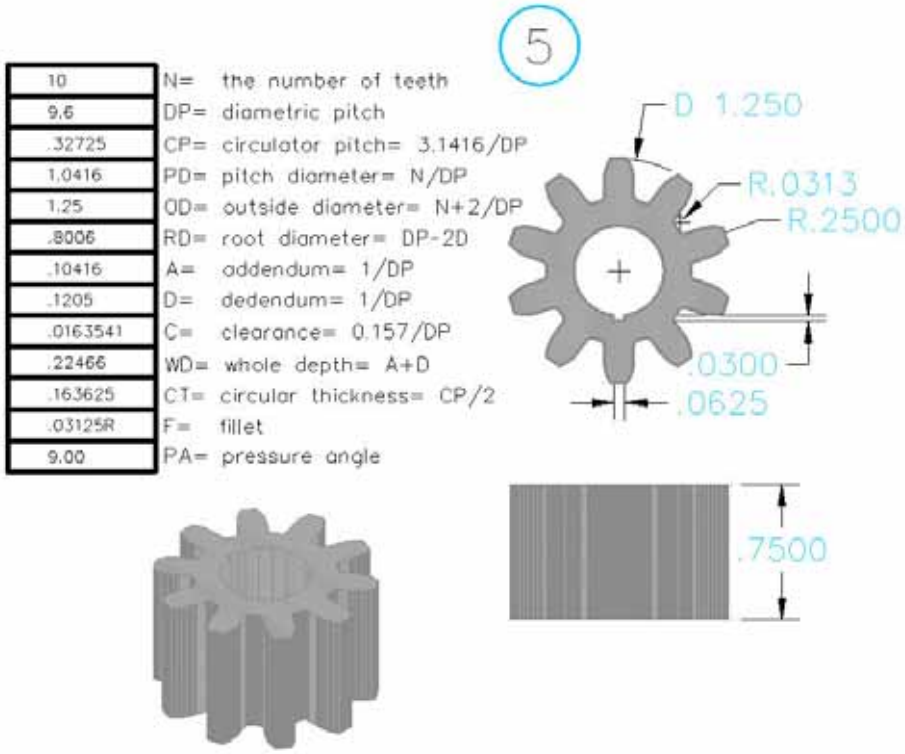

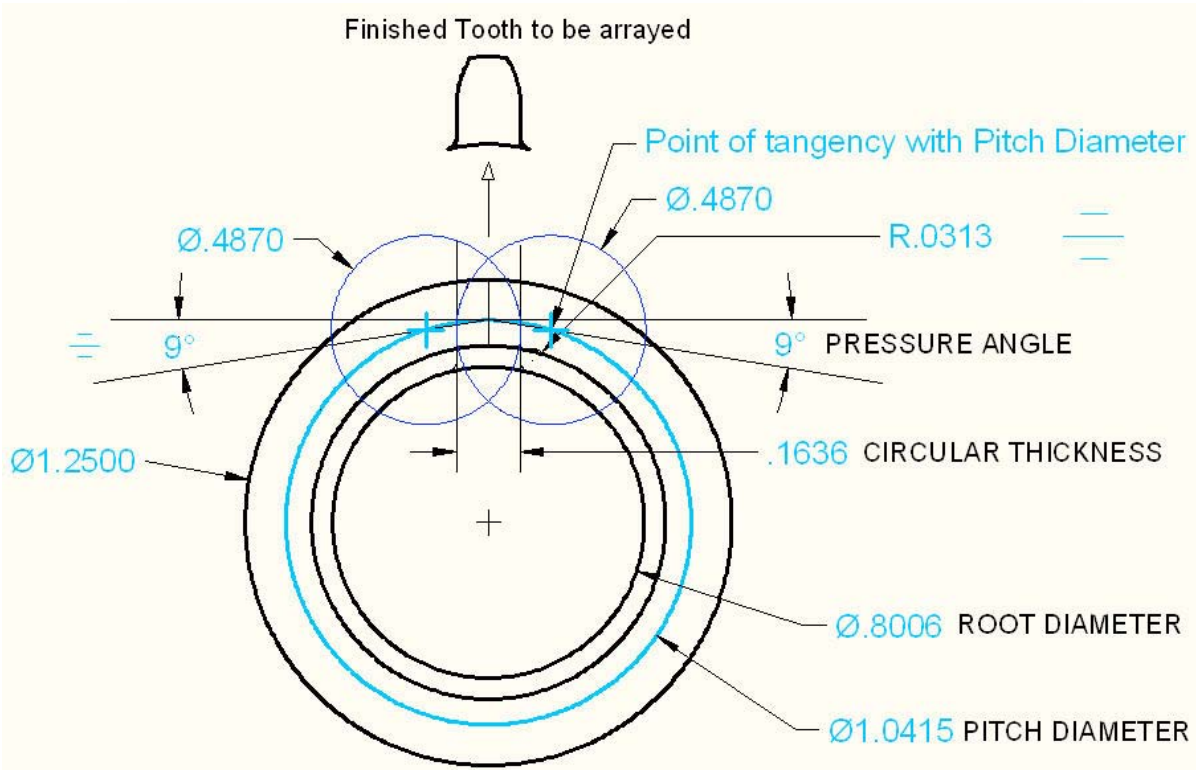

PART: 15986 V-Belt Pulley:

This component of this engineering project is a cast aluminum V-belt pulley and this part is what turns a belt to drive an auxiliary AC motor for this automobile.

YOUR TASK: *Create the detailed drawings below and an Isometric wireframe illustration and/or a 3d model of these parts illustrated in Isometric perspective.*

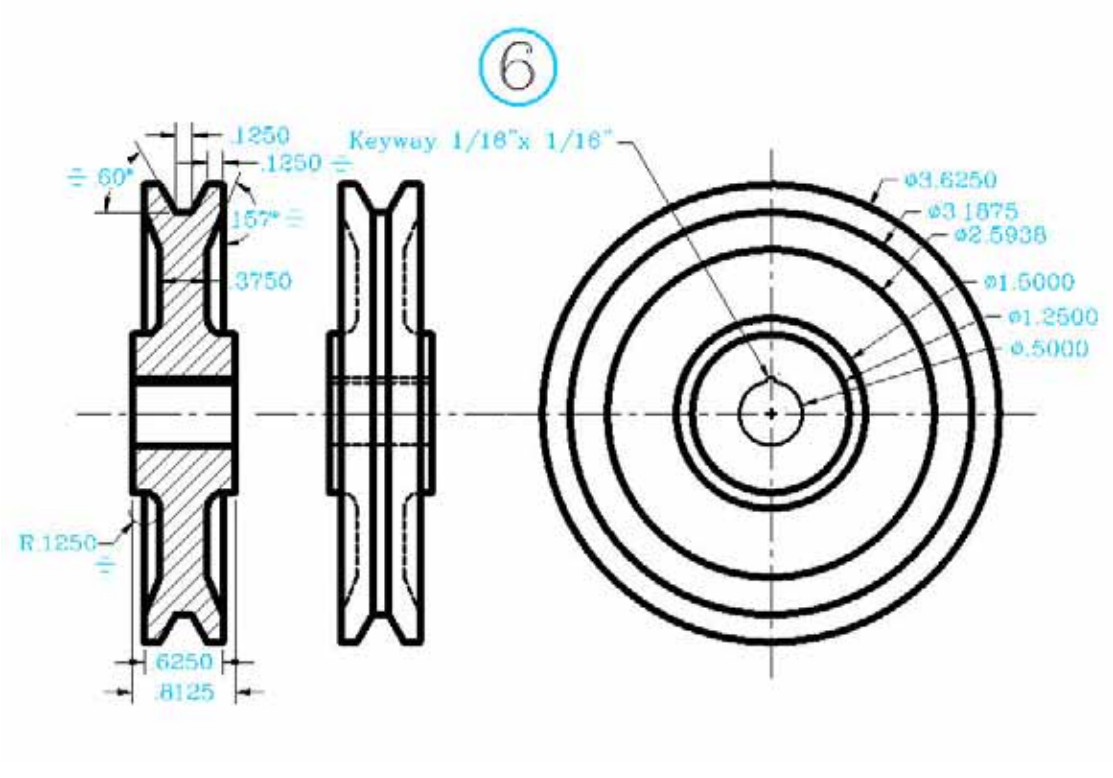

PART: 15980 HOUSING GEAR BELT ASSEMBLY:

This detailed and assembly drawing has a parts list of all of the components of the engineering project this company has been hired to complete. Below will be a series of images representing what comprises PART 15980.

YOUR TASK: *Create the detailed drawing and assembly drawing as seen below. There will be a series of snapshots of this drawing to help you complete this project. You may illustrate the exploded assembly as an Isometric Wireframe, or as a 3d model.*

Detailed and Exploded Assembly drawing snapshot

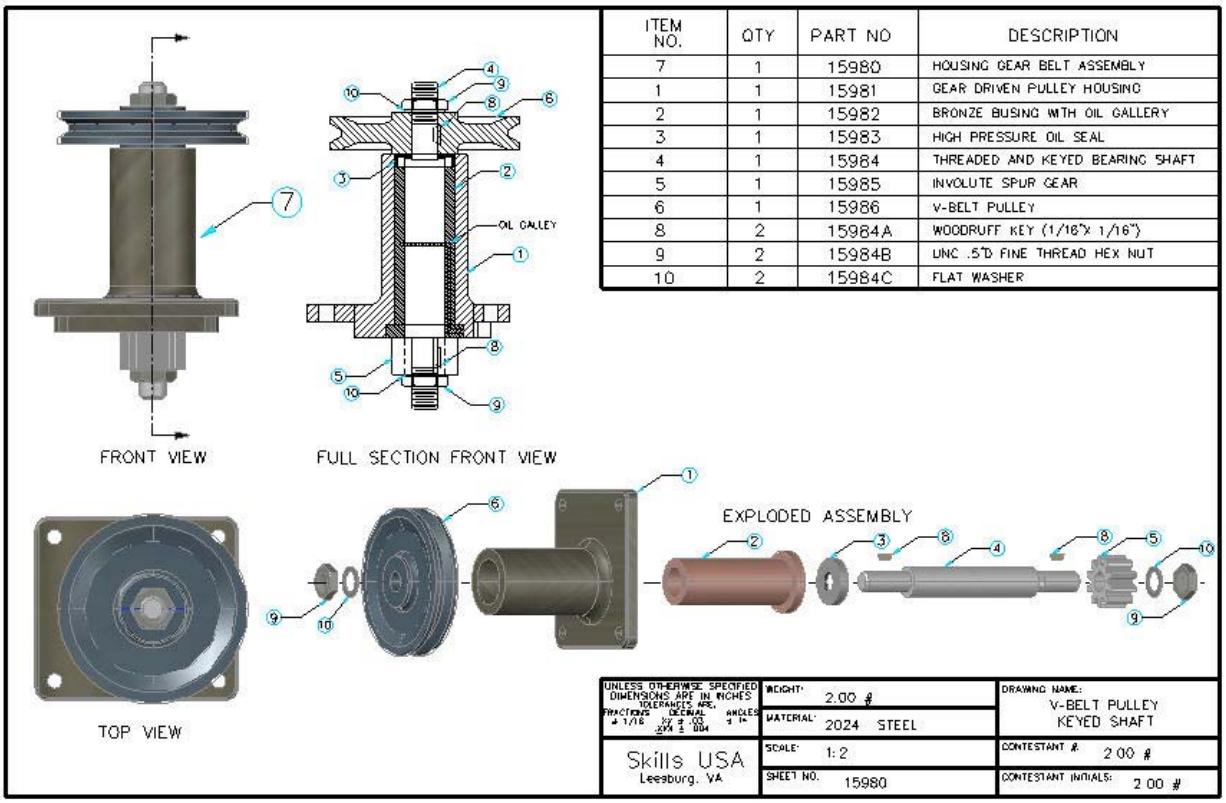

ITEM NO.	QTY	PART NO	DESCRIPTION
7	1	15980	HOUSING GEAR BELT ASSEMBLY
1	1	15981	GEAR DRIVEN PULLEY HOUSING
2	1	15982	BRONZE BUSING WITH OIL GALLERY
3	1	15983	HIGH PRESSURE OIL SEAL
4	1	15984	THREADED AND KEYED BEARING SHAFT
5	1	15985	INVOLUTE SPUR GEAR
6	1	15986	V-BELT PULLEY
8	2	15984A	WOODRUFF KEY (1/16"X 1/16")
9	2	15984B	UNC .5"D FINE THREAD HEX NUT
10	2	15984C	FLAT WASHER

Parts List

ITEM NO.	QTY	PART NO	DESCRIPTION
7	1	15980	HOUSING GEAR BELT ASSEMBLY
1	1	15981	GEAR DRIVEN PULLEY HOUSING
2	1	15982	BRONZE BUSING WITH OIL GALLERY
3	1	15983	HIGH PRESSURE OIL SEAL
4	1	15984	THREADED AND KEYED BEARING SHAFT
5	1	15985	INVOLUTE SPUR GEAR
6	1	15986	V-BELT PULLEY
8	2	15984A	WOODRUFF KEY (1/16"X 1/16")
9	2	15984B	UNC .5"D FINE THREAD HEX NUT
10	2	15984C	FLAT WASHER

Title Block

UNLESS OTHERWISE SPECIFIED DIMENSIONS ARE IN INCHES TOLERANCES ARE: FRACTIONS ± 1/16 DECIMAL .XX ± .03 .XXX ± .004 ANGLES ± 1°	WEIGHT: 2.00 #	DRAWING NAME: V-BELT PULLEY KEYED SHAFT
	MATERIAL: 2024 STEEL	
Skills USA Leesburg, VA	SCALE: 1:2	CONTESTANT #: 2.00 #
	SHEET NO: 15980	CONTESTANT INITIALS: 2.00 #

Full section

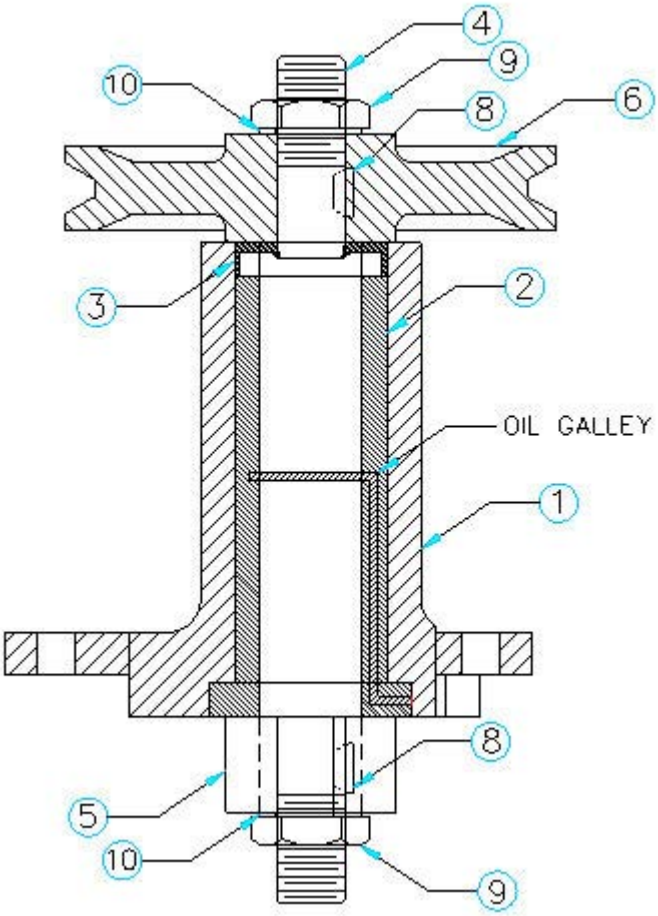

Rendered Image of Exploded Assembly

Front View Render

Skills USA 6/25/2009				Maximum Points	
Gear Driven Pulley Housing		NO.	SYM		Description of Rubric
PN# 15981	Views	3	VW		Required views present? Complete? Well laid out?
PN# 15981	Dimensioning		DIM		Dimensions well laid out! Rules of Dimensioning applied?
PN# 15981	Sections		ST		Is the offset section well laid out? Detailing hidden feature?
PN# 15981	3d Modeling		MD		Is the model oriented into Isometric perspective? Accurate?
PN# 15981	Title Block Data		TB		2 Points for each block-is there something there and appropriate
PN# 15981	Neatness/Quality		NQ		Iso View? 3d Model? Appropriate font? Clarifying Notes?
Bronze bushing with oil gallery					
PN# 15982	Views	6	VW		Required views present? Complete? Well laid out?
PN# 15982	Dimensioning		DIM		Dimensions well laid out! Rules of Dimensioning applied?
PN# 15982	Sections		ST		Is the full section well laid out? Detailing hidden feature?
PN# 15982	3d Modeling		MD		Is the model oriented into Isometric perspective? Accurate?
PN# 15982	Title Block Data		TB		2 Points for each block-is there something there and appropriate
PN# 15982	Neatness/Quality		NQ		Iso View? 3d Model? Appropriate font? Clarifying Notes?
High Pressure Oil Seal					
PN# 15983	Views	3	VW		Required views present? Complete? Well laid out?
PN# 15983	Dimensioning		DIM		Dimensions well laid out! Rules of Dimensioning applied?
PN# 15983	3d Modeling		MD		Is the model oriented into Isometric perspective? Accurate?
PN# 15983	Title Block Data		TB		2 Points for each block-is there something there and appropriate
PN# 15983	Neatness/Quality		NQ		Iso View? 3d Model? Appropriate font? Clarifying Notes?
Shaft Threaded and Keyed					
PN# 15984	Views	3	VW		Required views present? Complete? Well laid out?
PN# 15984	Dimensioning		DIM		Dimensions well laid out! Rules of Dimensioning applied?
PN# 15983	3d Modeling		MD		Is the model oriented into Isometric perspective? Accurate?
PN# 15984	Title Block Data		TB		2 Points for each block-is there something there and appropriate
PN# 15984	Neatness/Quality		NQ		Iso View? 3d Model? Appropriate font? Clarifying Notes?
Involute Spur Gear (keyed shaft)					
PN# 15985	Views	3	VW		Required views present? Complete? Well laid out?
PN# 15985	Dimensioning		DIM		Dimensions well laid out! Rules of Dimensioning applied?
PN# 15983	3d Modeling		MD		Is the model oriented into Isometric perspective? Accurate?
PN# 15985	Title Block Data		TB		2 Points for each block-is there something there and appropriate
PN# 15985	Neatness/Quality		NQ		Iso View? 3d Model? Appropriate font? Clarifying Notes?
V-belt pulley (keyed shaft)					
PN# 15986	Views	3	VW		Required views present? Complete? Well laid out?
PN# 15986	Dimensioning		DIM		Dimensions well laid out! Rules of Dimensioning applied?
PN# 15983	3d Modeling		MD		Is the model oriented into Isometric perspective? Accurate?
PN# 15986	Title Block Data		TB		2 Points for each block-is there something there and appropriate
PN# 15986	Neatness/Quality		NQ		Iso View? 3d Model? Appropriate font? Clarifying Notes?
Housing Gear/Belt-Assembly					
PN# 15980	Views	4	VW		Required views present? Complete? Well laid out?
PN# 15980	Dimensioning		DIM		Dimensions well laid out! Rules of Dimensioning applied?
PN# 15983	3d Modeling		MD		Is the model oriented into Isometric perspective? Accurate?
PN# 15980	Title Block Data		TB		2 Points for each block-is there something there and appropriate
PN# 15980	Neatness/Quality		NQ		Iso View? 3d Model? Appropriate font? Clarifying Notes?

Skills USA 6/25/2009

Drawing	Quantity	Type	Description
15980	1	eatail/Assemb	Housing Gear/Pulley-Assembly
15981	1	Detail	Gear Driven Pulley Housing
15982	1	Detail	Bronze bushing with oil galley
15983	1	Detail	High Pressure Oil Seal
15984	1	Detail	Threaded and keyed bearing shaft
15985	1	Detail	Involute Spur Gear (keyed shaft)
15986	1	Detail	V-belt pulley (keyed shaft)
15984a	2	Detail	Woodruff Key (1/16" x 1/16")
15984b	2	Detail	UNC .5D Fine Thread Hex Nut
15984c	2	Detail	Flat Washer

ITEM NO.	QTY	PART NO	DESCRIPTION
7	1	15980	HOUSING GEAR BELT ASSEMBLY
1	1	15981	GEAR DRIVEN PULLEY HOUSING
2	1	15982	BRONZE BUSING WITH OIL GALLERY
3	1	15983	HIGH PRESSURE OIL SEAL
4	1	15984	THREADED AND KEYED BEARING SHAFT
5	1	15985	INVOLUTE SPUR GEAR
6	1	15986	V-BELT PULLEY
8	2	15984A	WOODRUFF KEY (1/16"X 1/16")
9	2	15984B	UNC .5"D FINE THREAD HEX NUT
10	2	15984C	FLAT WASHER

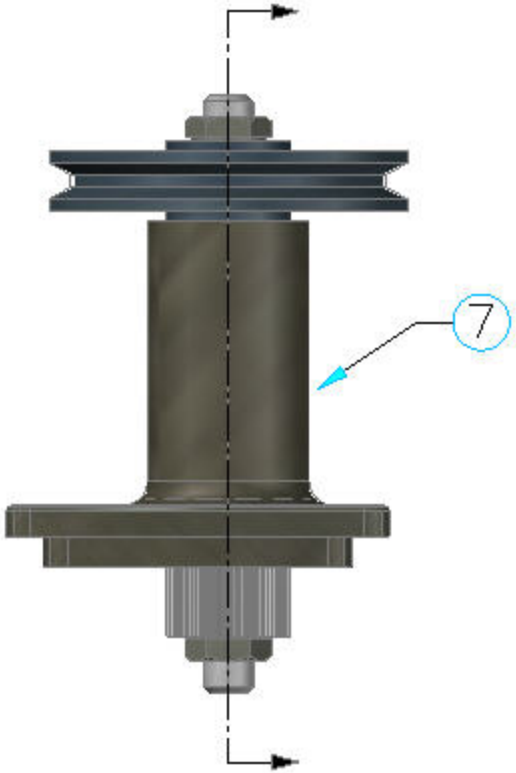

FRONT VIEW

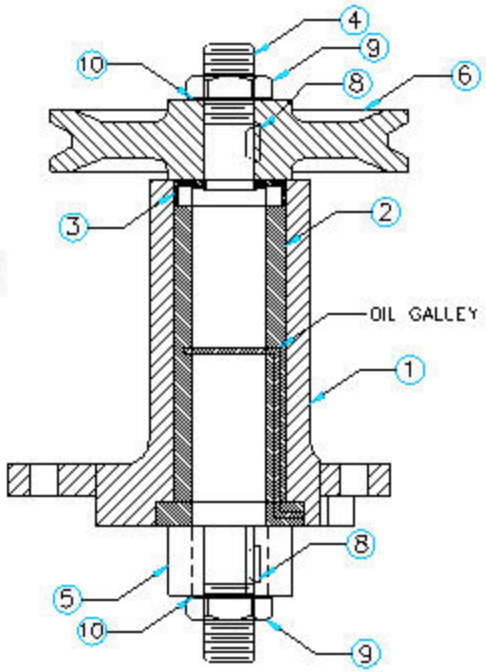

FULL SECTION FRONT VIEW

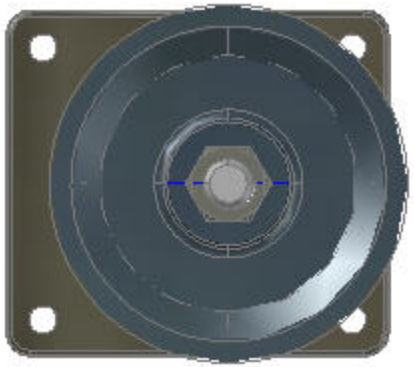

TOP VIEW

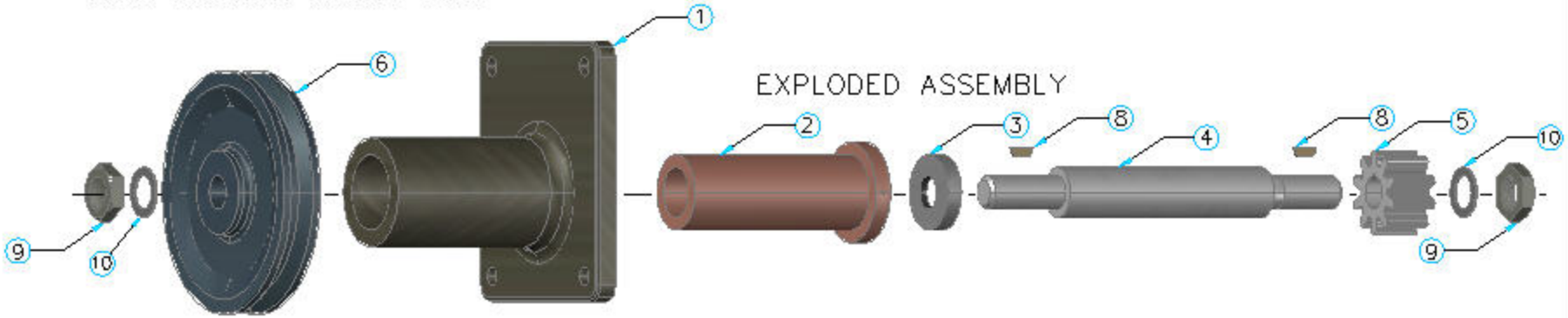

EXPLODED ASSEMBLY

UNLESS OTHERWISE SPECIFIED DIMENSIONS ARE IN INCHES TOLERANCES ARE: FRACTIONS ± 1/16 DECIMAL .XX ± .03 .XXX ± .004 ANGLES ± 1°	WEIGHT: 2.00 #	DRAWING NAME: V-BELT PULLEY KEYED SHAFT
	MATERIAL: 2024 STEEL	
Skills USA Leesburg, VA	SCALE: 1:2	CONTESTANT #: 2.00 #
	SHEET NO: 15980	CONTESTANT INITIALS: 2.00 #

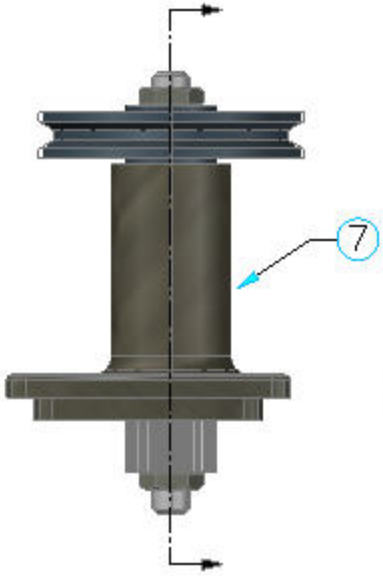

FRONT VIEW

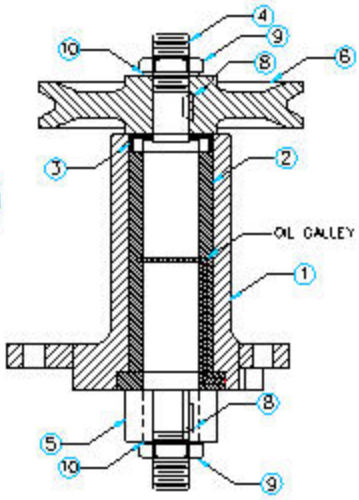

FULL SECTION FRONT VIEW

ITEM NO.	QTY	PART NO	DESCRIPTION
7	1	15980	HOUSING GEAR BELT ASSEMBLY
1	1	15981	GEAR DRIVEN PULLEY HOUSING
2	1	15982	BRONZE BUSING WITH OIL GALLERY
3	1	15983	HIGH PRESSURE OIL SEAL
4	1	15984	THREADED AND KEYED BEARING SHAFT
5	1	15985	INVOLUTE SPUR GEAR
6	1	15986	V-BELT PULLEY
8	2	15984A	WOODRUFF KEY (1/16"X 1/16")
9	2	15984B	UNC .5"D FINE THREAD HEX NUT
10	2	15984C	FLAT WASHER

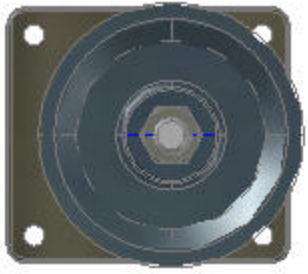

TOP VIEW

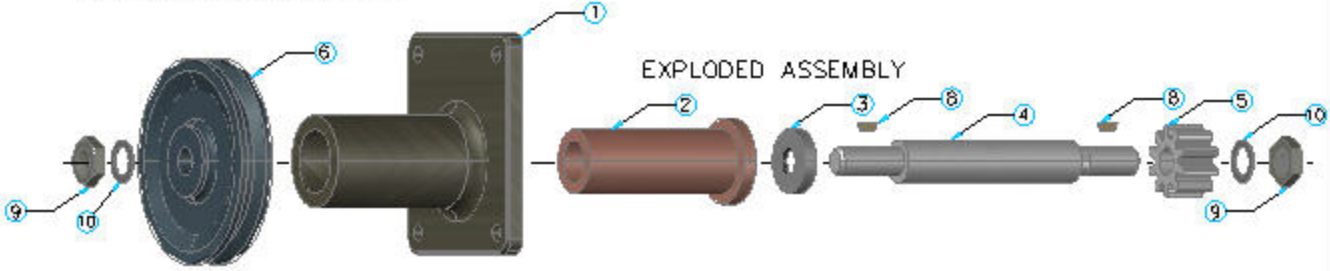

EXPLODED ASSEMBLY

UNLESS OTHERWISE SPECIFIED DIMENSIONS ARE IN INCHES TOLERANCES ARE. FRACTIONS ± 1/16 DECIMAL .XX ± .03 .XXX ± .004 ANGLES ± 1°	WEIGHT: 2.00 #	DRAWING NAME: V-BELT PULLEY KEYED SHAFT
	MATERIAL: 2024 STEEL	
Skills USA Leesburg, VA	SCALE: 1:2	CONTESTANT #: 2 00 #
	SHEET NO. 15980	CONTESTANT INITIALS: 2 00 #

ITEM NO.	QTY	PART NO	DESCRIPTION
7	1	15980	HOUSING GEAR BELT ASSEMBLY
1	1	15981	GEAR DRIVEN PULLEY HOUSING
2	1	15982	BRONZE BUSING WITH OIL GALLERY
3	1	15983	HIGH PRESSURE OIL SEAL
4	1	15984	THREADED AND KEYED BEARING SHAFT
5	1	15985	INVOLUTE SPUR GEAR
6	1	15986	V-BELT PULLEY
8	2	15984A	WOODRUFF KEY (1/16"X 1/16")
9	2	15984B	UNC .5"D FINE THREAD HEX NUT
10	2	15984C	FLAT WASHER

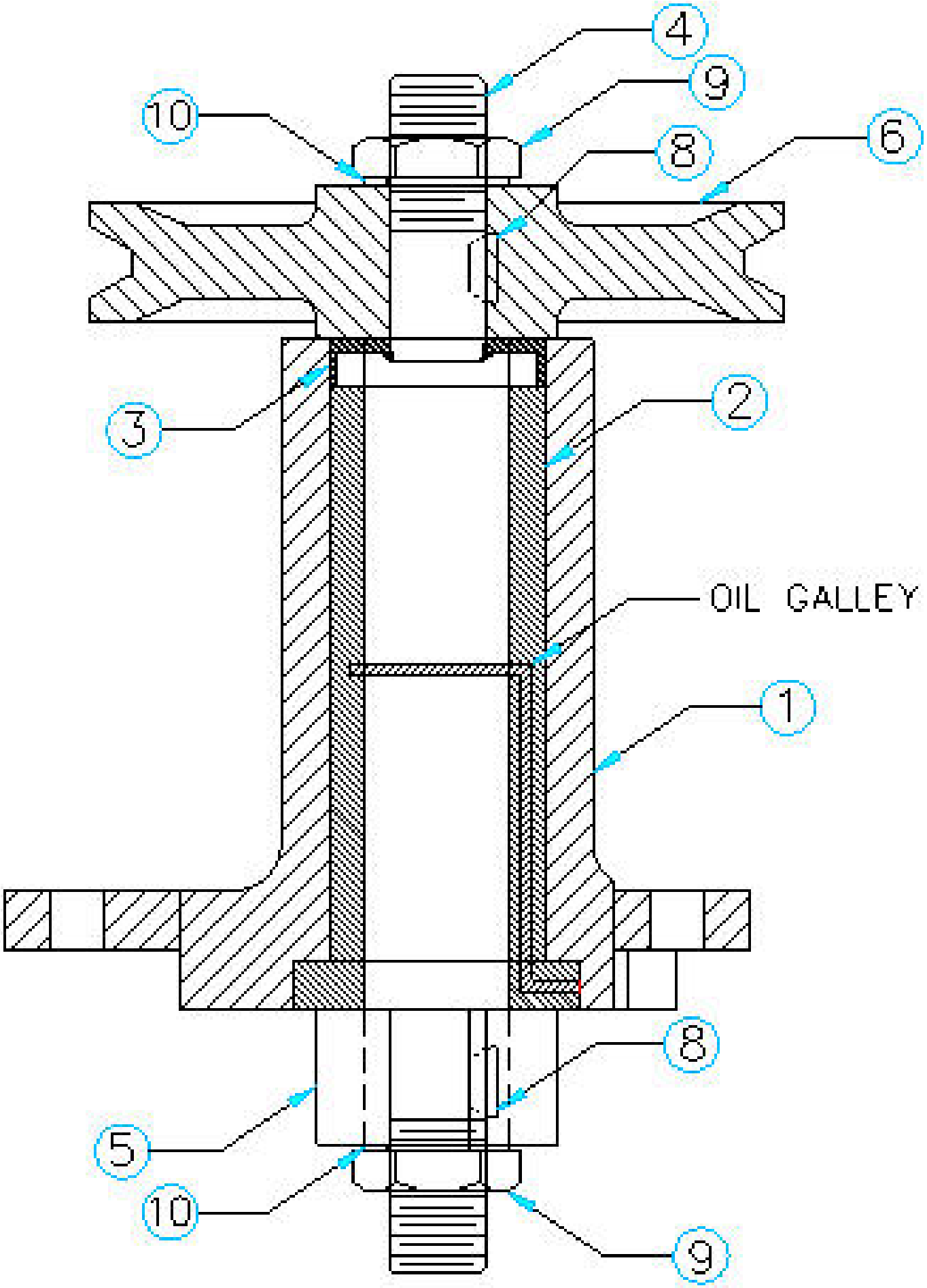
4
9
10
8
6
3
2
OIL GALLEY
1
8
5
10
9

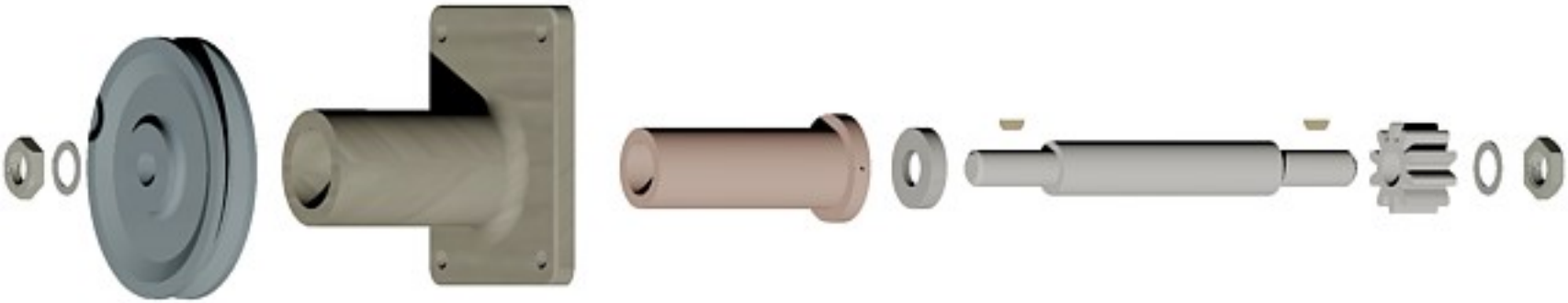

UNLESS OTHERWISE SPECIFIED DIMENSIONS ARE IN INCHES TOLERANCES ARE: FRACTIONS ± 1/16 DECIMAL .XX ± .03 .XXX ± .004 ANGLES ± 1°	WEIGHT: 2.00 # MATERIAL: 2024 STEEL	DRAWING NAME: V-BELT PULLEY KEYED SHAFT
Skills USA Leesburg, VA	SCALE: 1:2 SHEET NO: 15980	CONTESTANT #: 2.00 # CONTESTANT INITIALS: 2.00 #

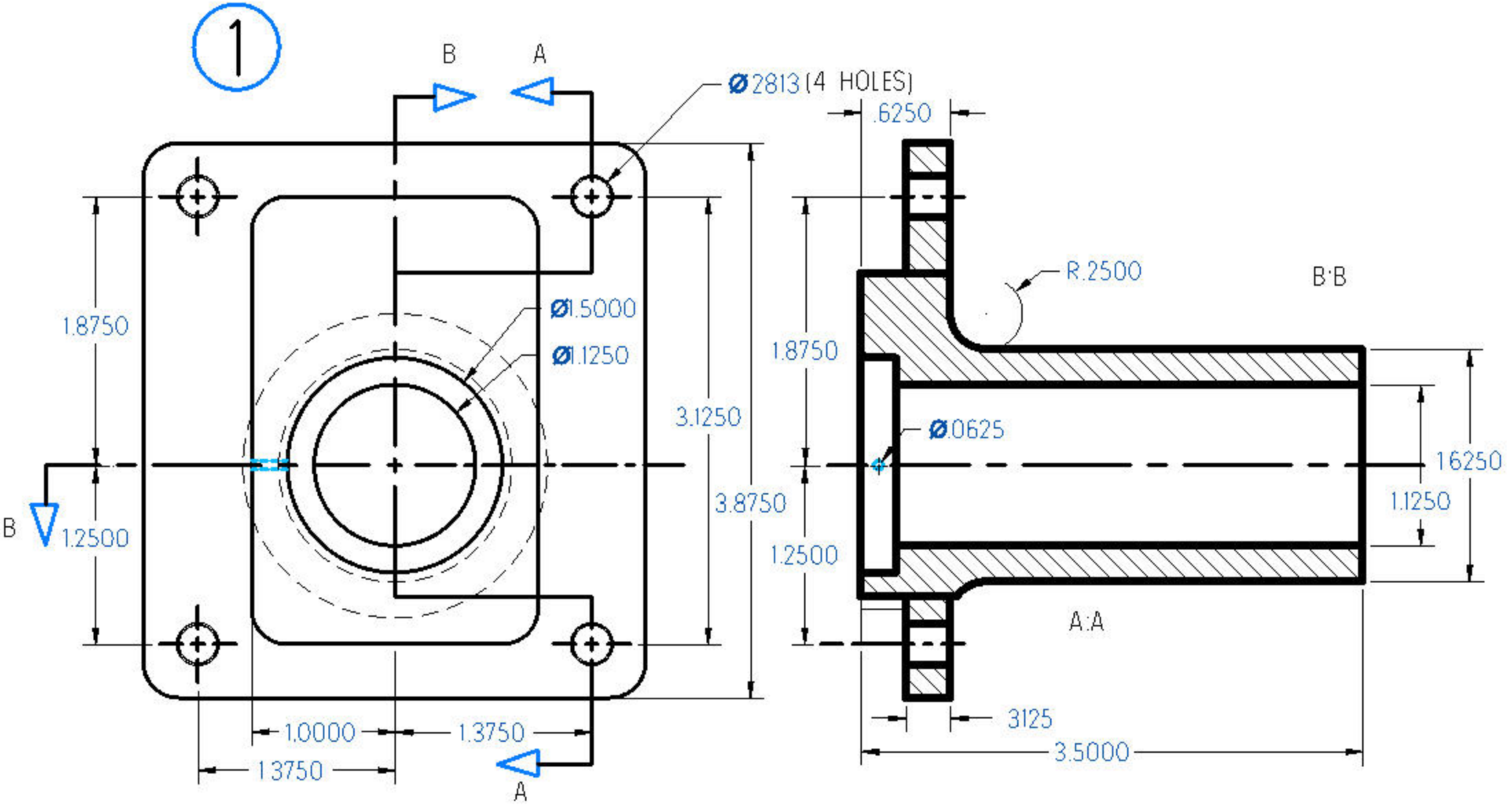
1
B
A
Ø.2813 (4 HOLES)
.6250
R.2500
B·B
1.8750
Ø1.5000
Ø1.1250
3.1250
Ø.0625
1.6250
1.1250
3.8750
B
1.2500
1.2500
A·A
1.0000
1.3750
1.3750
A
.3125
3.5000

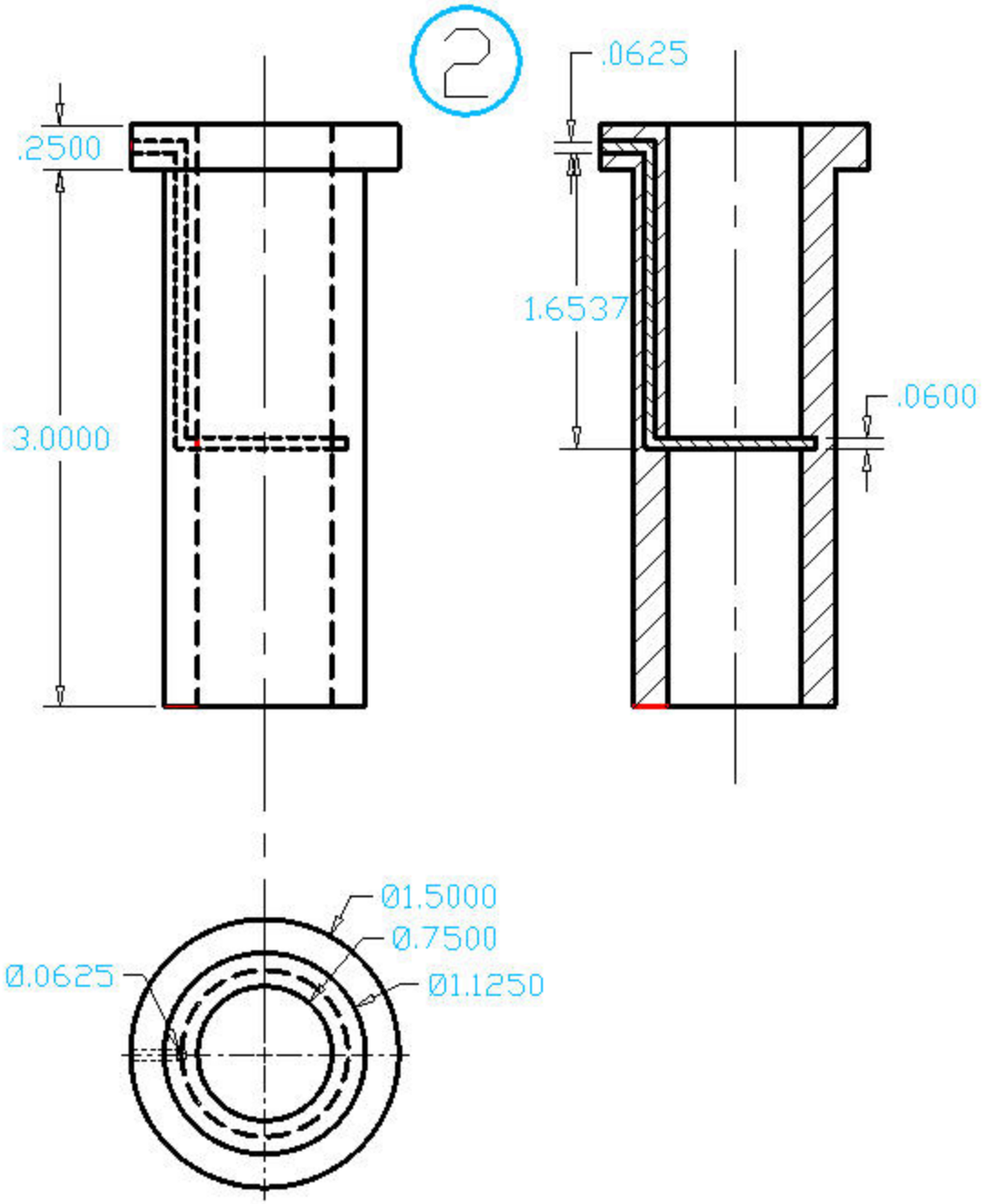
2
.2500
3.0000
.0625
1.6537
.0600
Ø1.5000
Ø0.7500
Ø0.0625
Ø1.1250

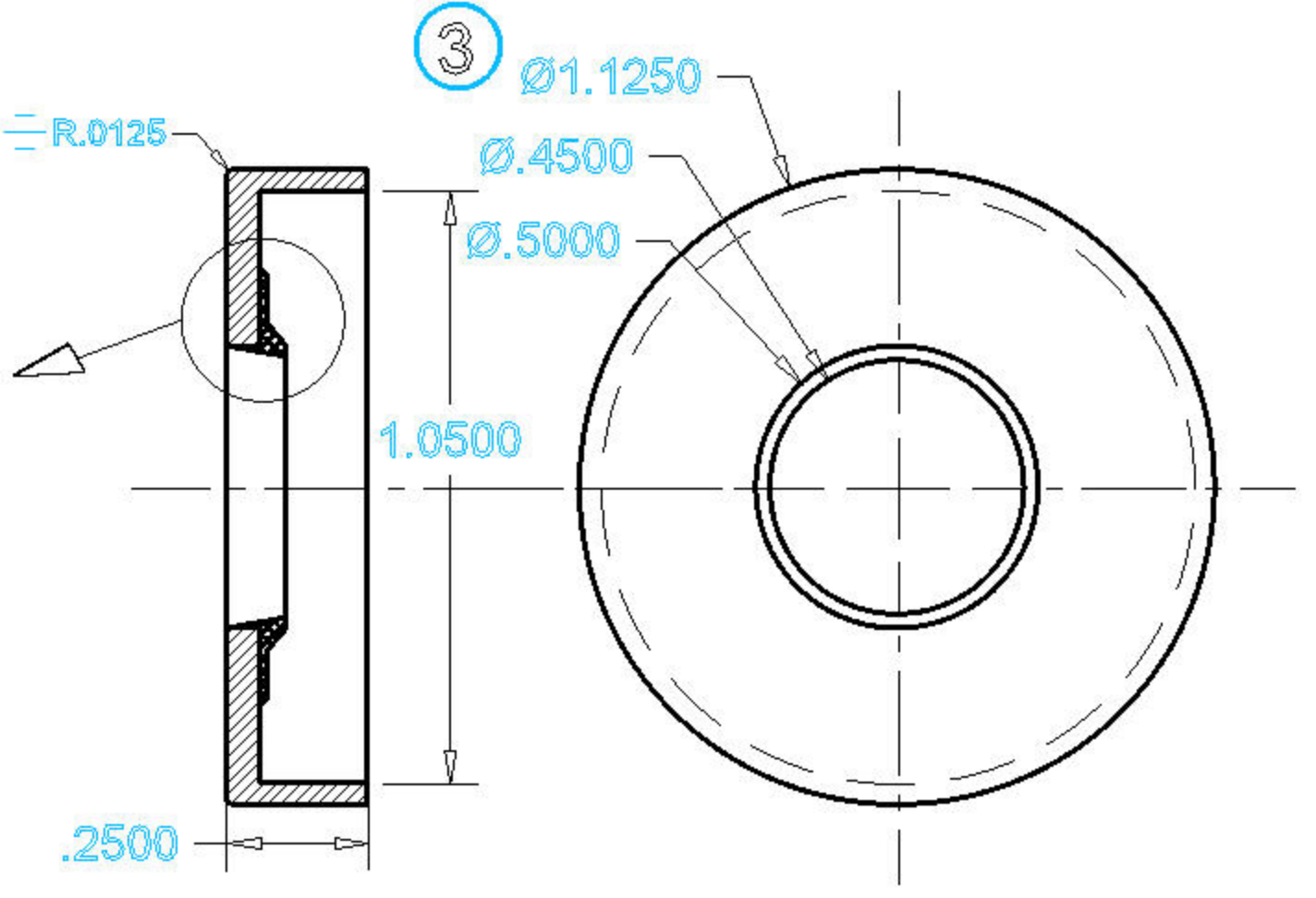
3
Ø1.1250
R.0125
Ø.4500
Ø.5000
1.0500
.2500

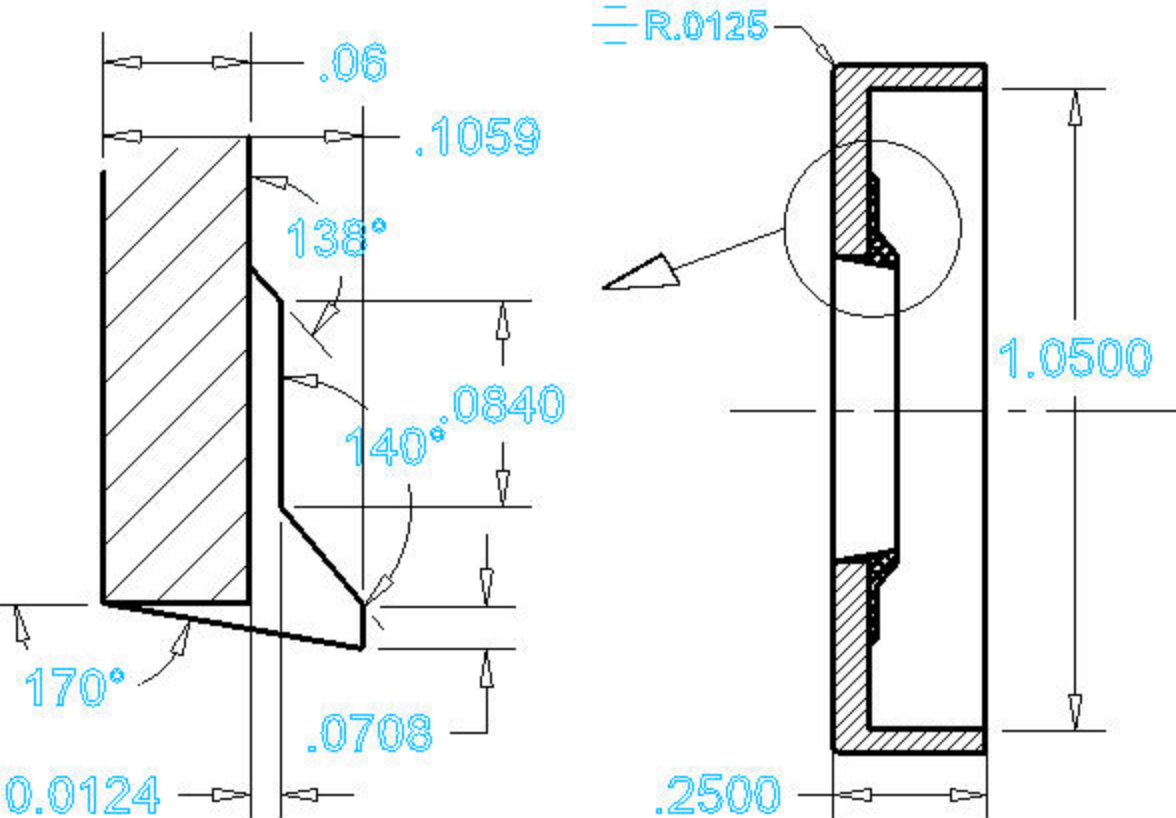
.06
.1059
138°
.0840
140°
170°
.0708
0.0124
R.0125
1.0500
.2500

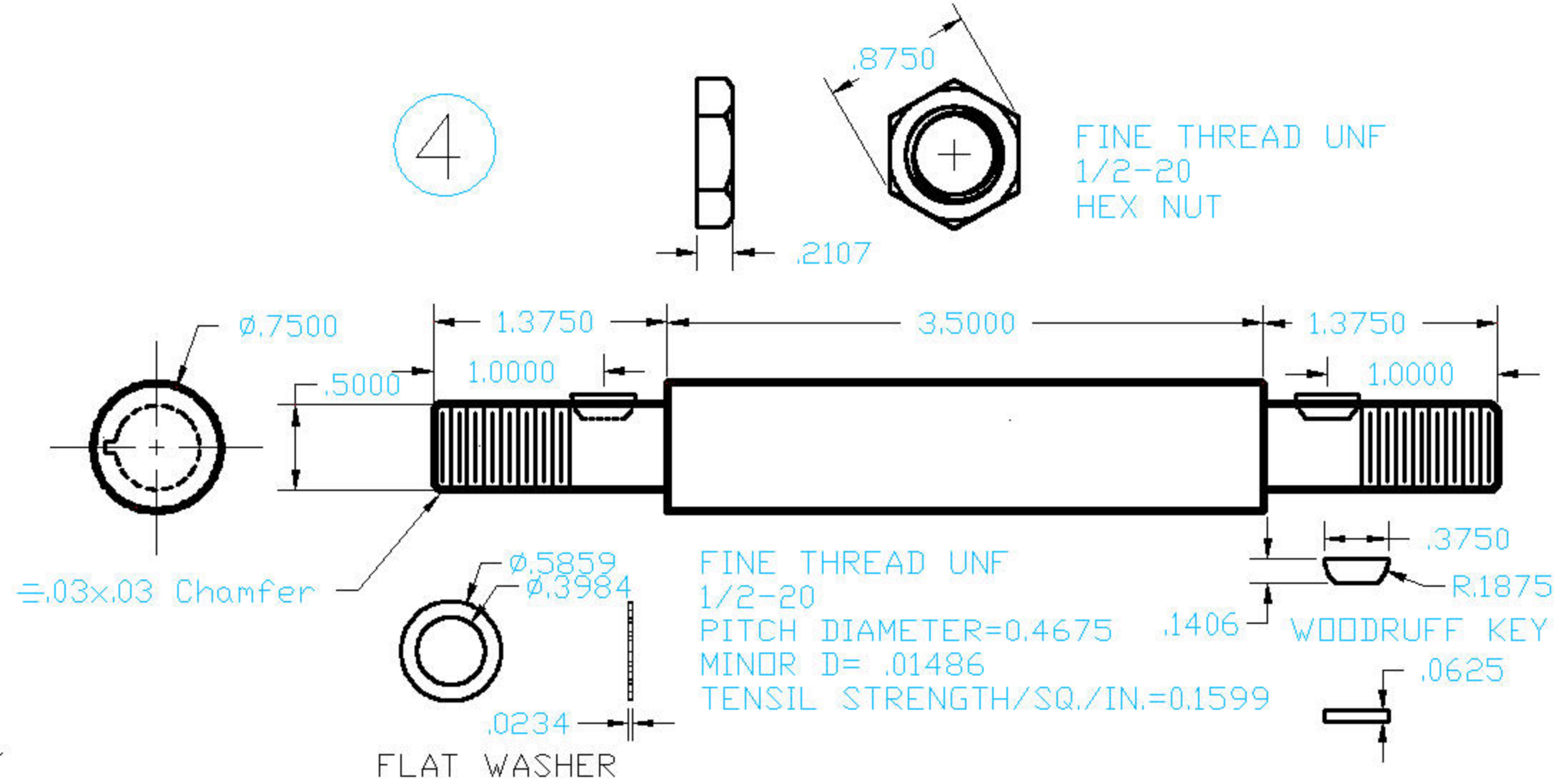
4
.8750
.2107
FINE THREAD UNF
1/2-20
HEX NUT
Ø.7500
1.3750
3.5000
1.3750
.5000
1.0000
1.0000
.03x.03 Chamfer
Ø.5859
Ø.3984
FINE THREAD UNF
1/2-20
PITCH DIAMETER=0.4675
MINOR D= .01486
TENSIL STRENGTH/SQ./IN.=0.1599
.3750
R.1875
.1406
WOODRUFF KEY
.0625
.0234
FLAT WASHER

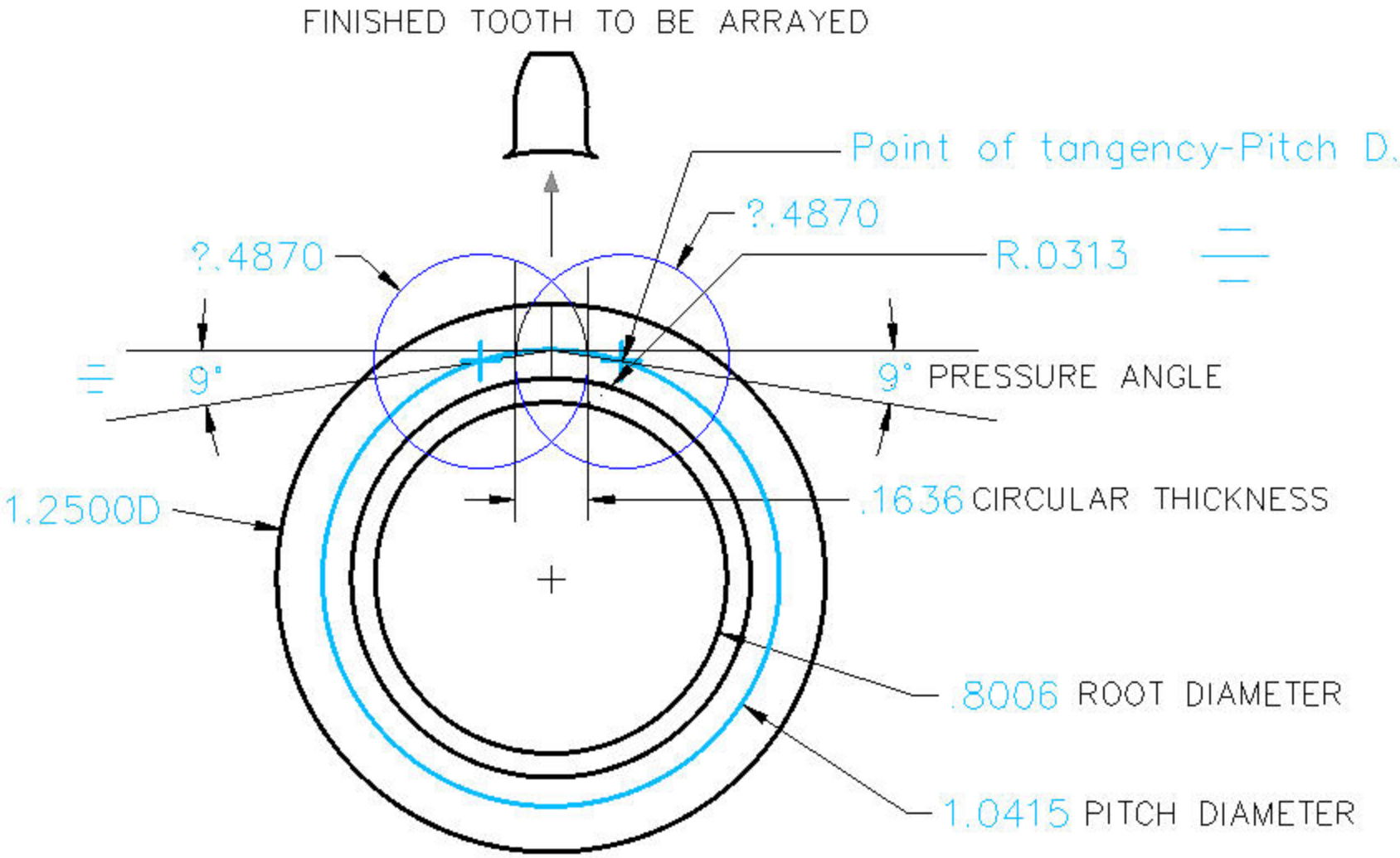
FINISHED TOOTH TO BE ARRAYED
Point of tangency-Pitch D.
?.4870
?.4870
R.0313
9°
9° PRESSURE ANGLE
1.2500D
.1636 CIRCULAR THICKNESS
.8006 ROOT DIAMETER
1.0415 PITCH DIAMETER

5

10	N= the number of teeth
9.6	DP= diametric pitch
.32725	CP= circulator pitch= 3.1416/DP
1.0416	PD= pitch diameter= N/DP
1.25	OD= outside diameter= N+2/DP
.8006	RD= root diameter= DP-2D
.10416	A= addendum= 1/DP
.1205	D= dedendum= 1/DP
.0163541	C= clearance= 0.157/DP
.22466	WD= whole depth= A+D
.163625	CT= circular thickness= CP/2
.03125R	F= fillet
9.00	PA= pressure angle

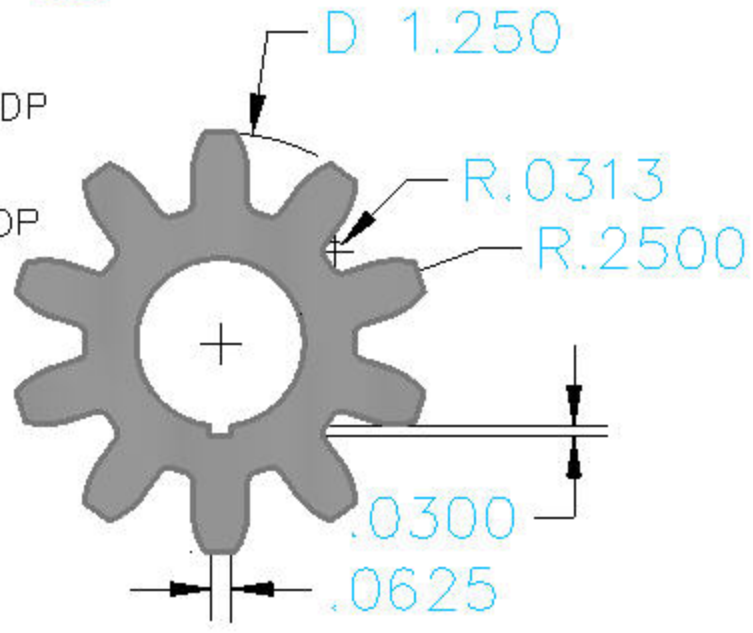

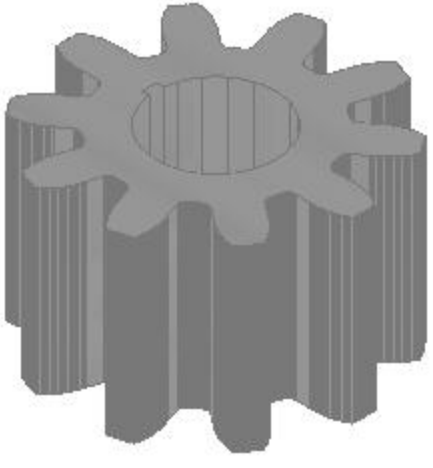

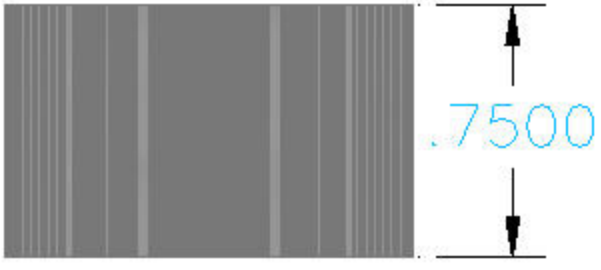

6

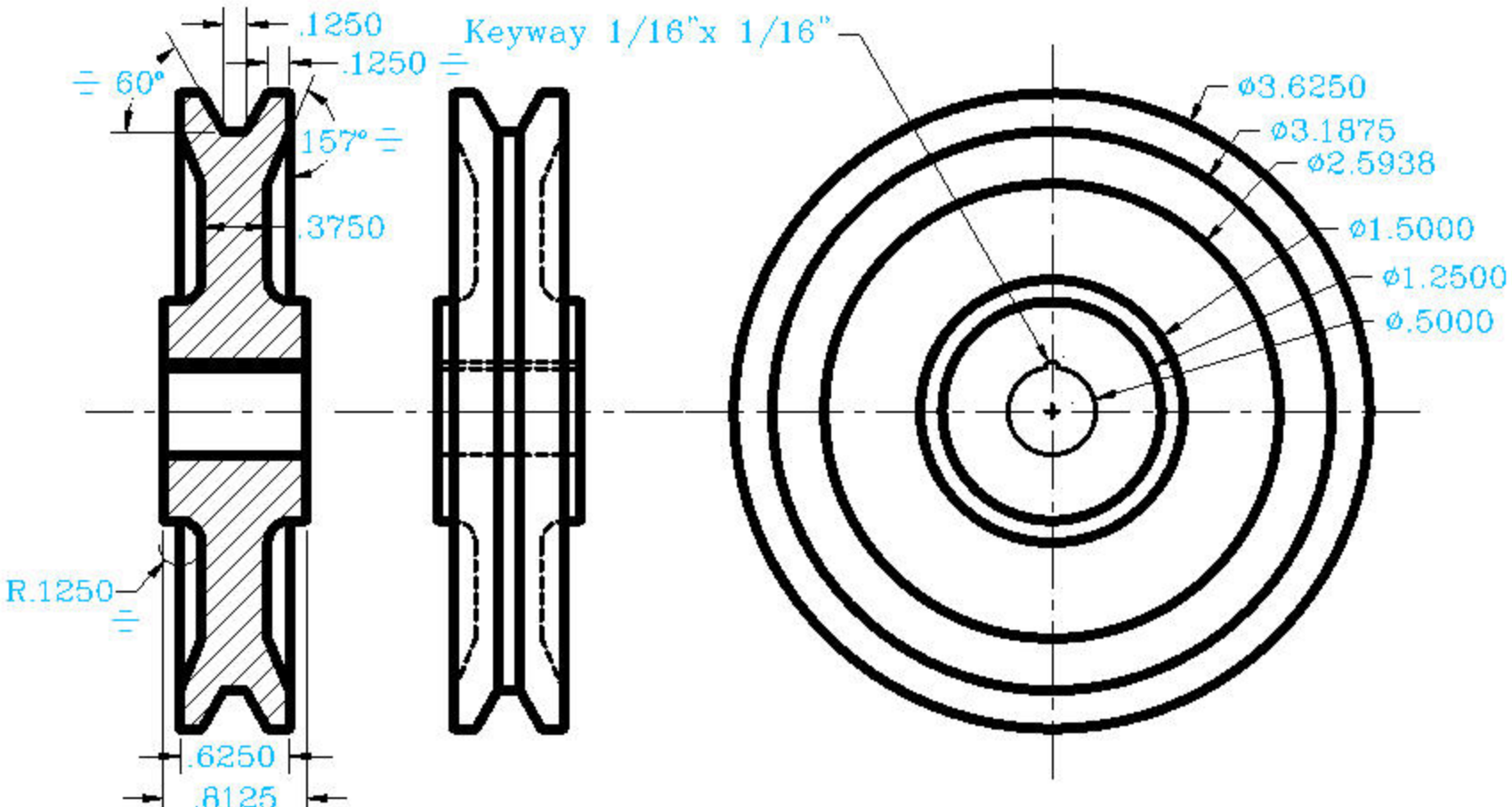
.1250
.1250
60°
157°
.3750
R.1250
.6250
.8125
Keyway 1/16"x 1/16"
ø3.6250
ø3.1875
ø2.5938
ø1.5000
ø1.2500
ø.5000

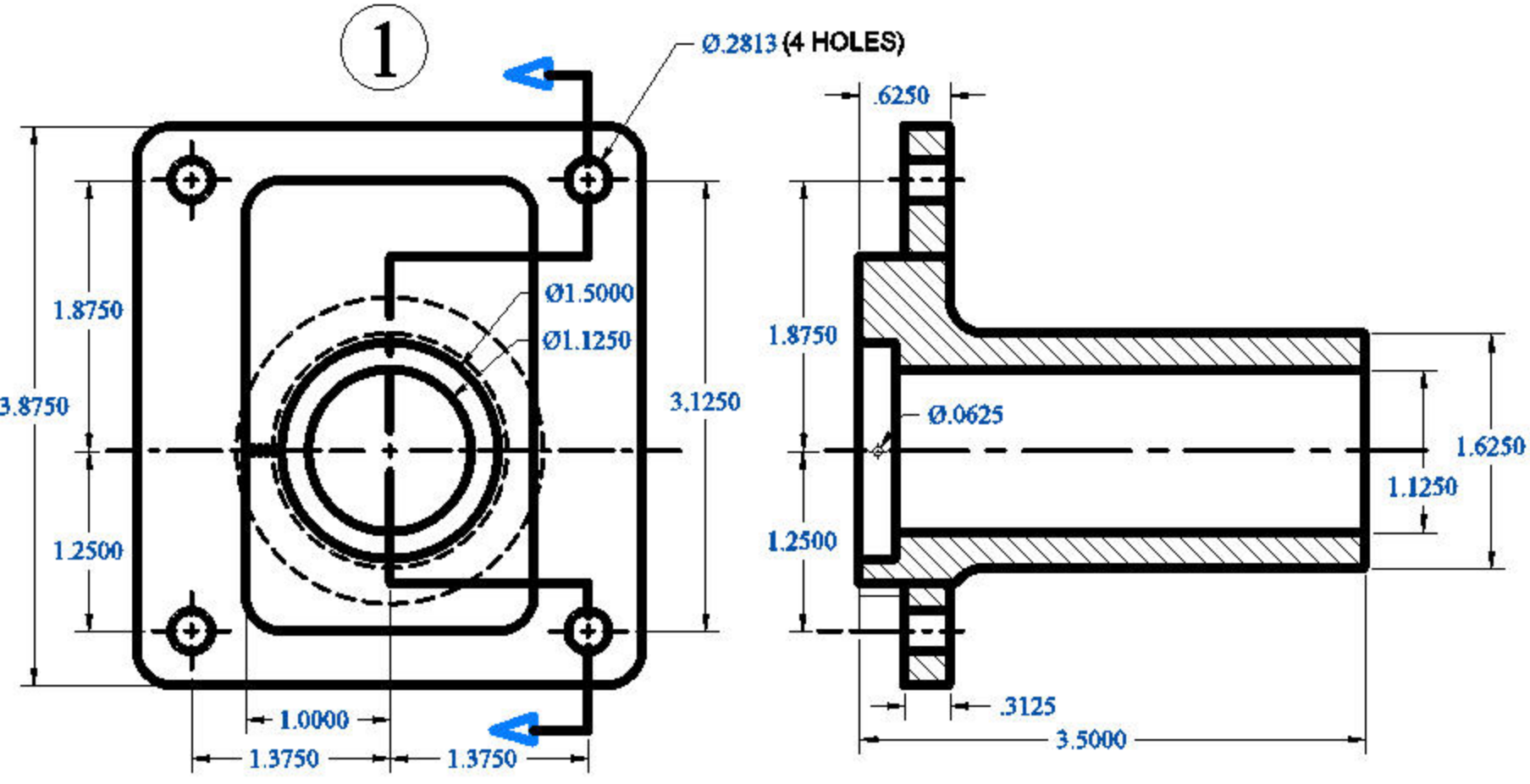
1
Ø.2813 (4 HOLES)
Ø1.5000
Ø1.1250
1.8750
3.8750
3.1250
1.2500
1.0000
1.3750
1.3750
.6250
1.8750
Ø.0625
1.6250
1.1250
1.2500
.3125
3.5000

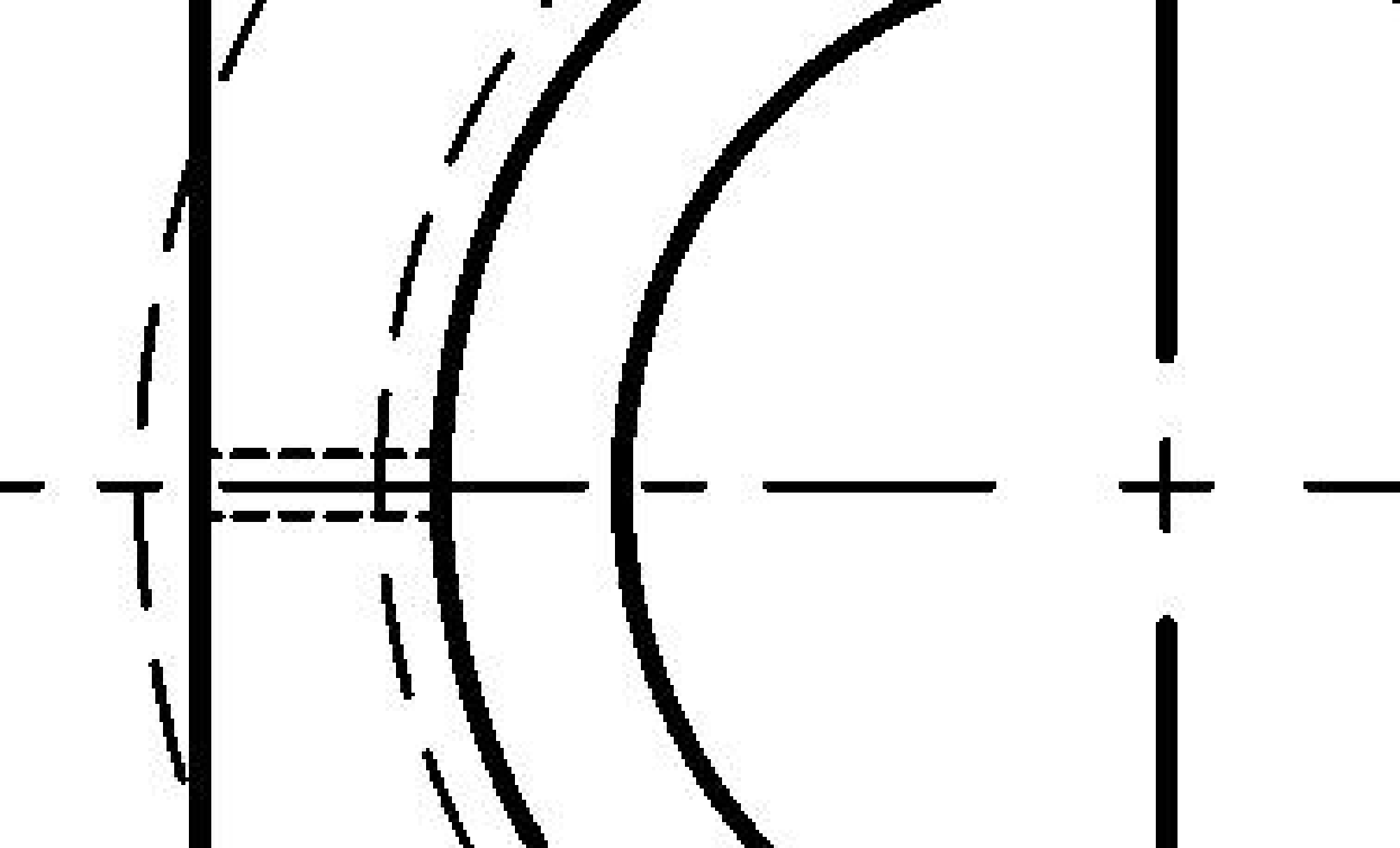

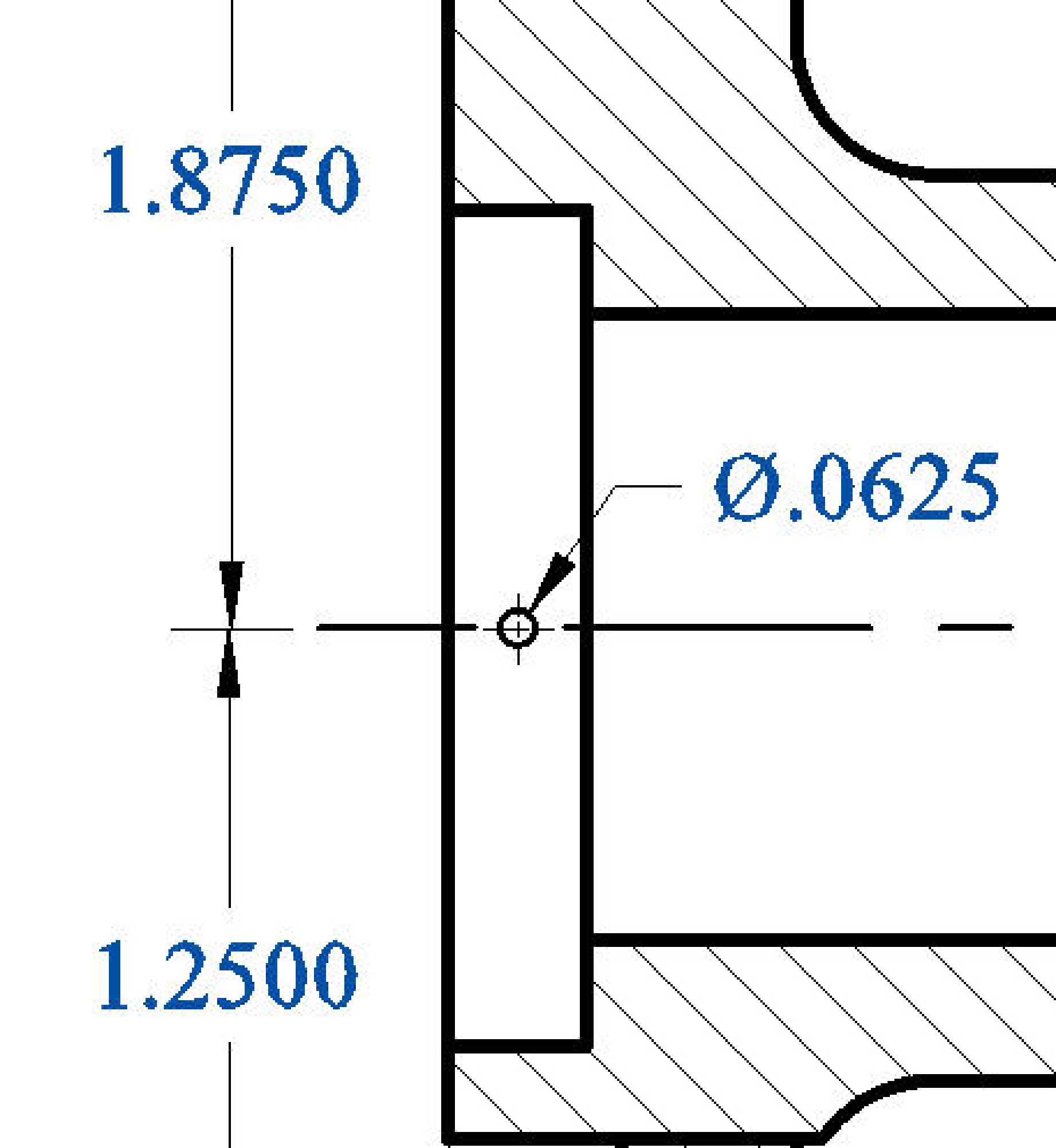
1.8750
Ø.0625
1.2500

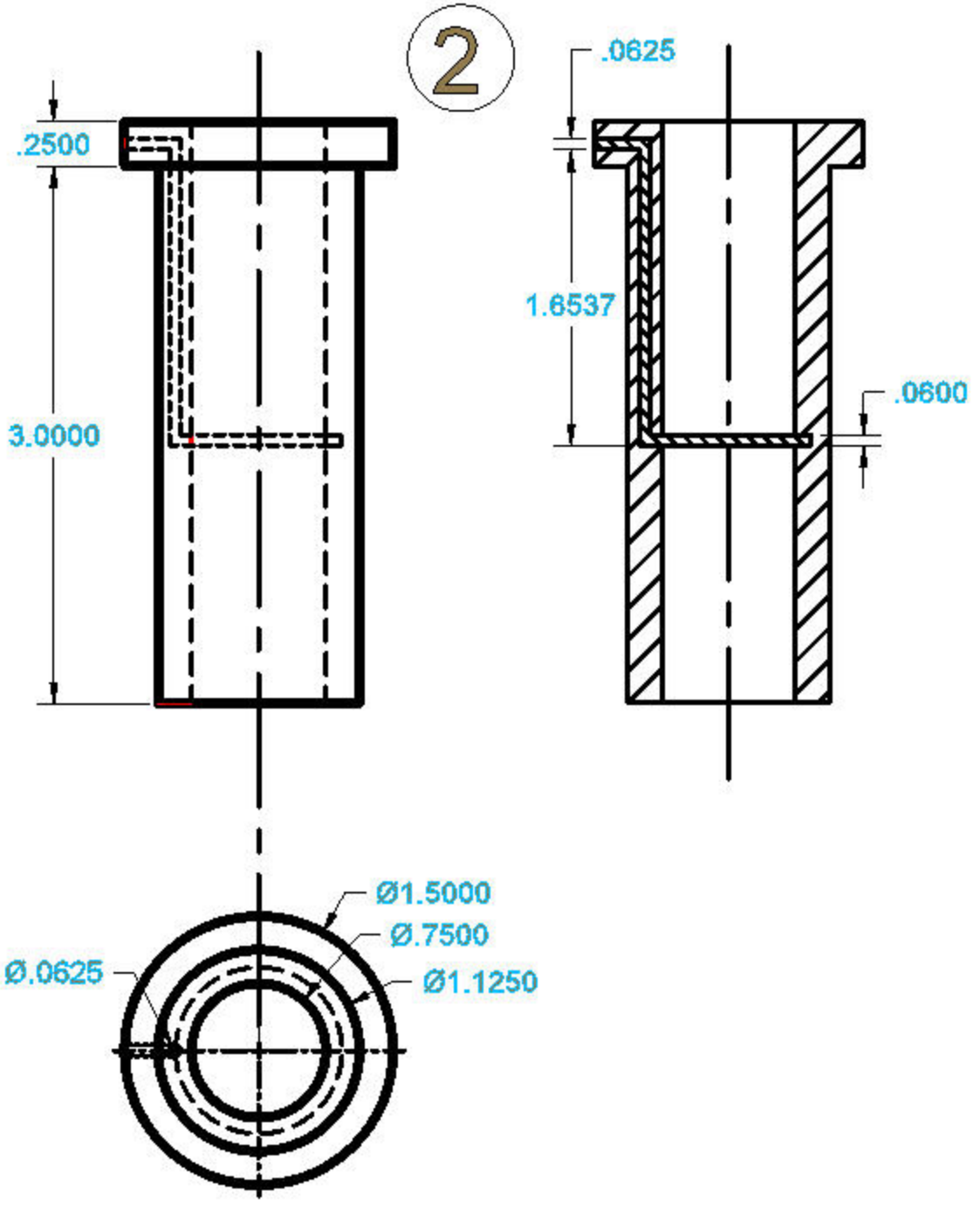
2
.2500
3.0000
.0625
1.6537
.0600
Ø1.5000
Ø.7500
Ø.0625
Ø1.1250

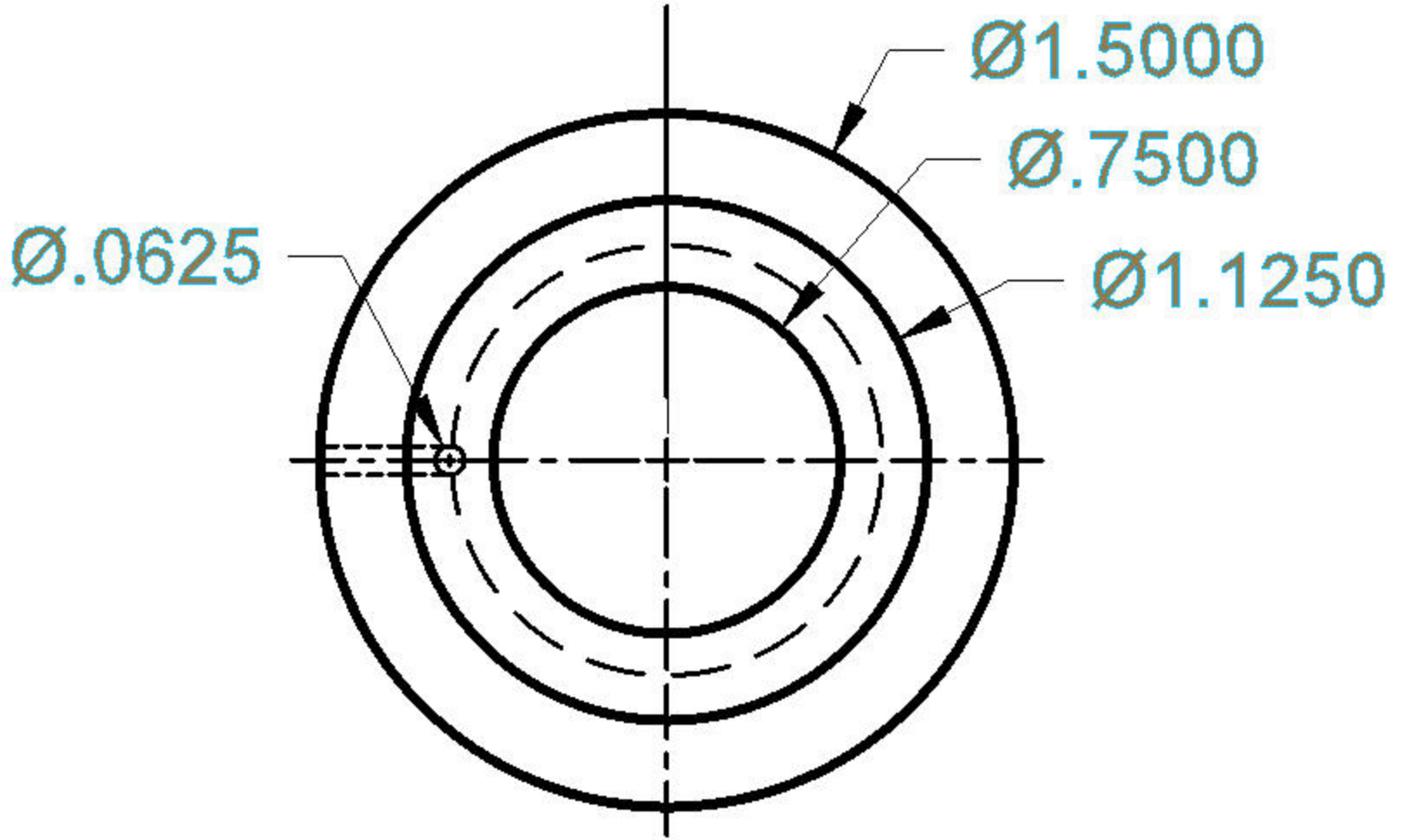
Ø1.5000
Ø.7500
Ø.0625
Ø1.1250

Skills USA 6/25/2009

Drawing	Quantity	Type	Description
15980	1	atail/Assem	Housing Gear/Pulley-Assembly
15981	1	Detail	Gear Driven Pulley Housing
15982	1	Detail	Bronze bushing with oil galley
15983	1	Detail	High Pressure Oil Seal
15984	1	Detail	Threaded and keyed bearing shaft
15985	1	Detail	Involute Spur Gear (keyed shaft)
15986	1	Detail	V-belt pulley (keyed shaft)
15984a	2	Detail	Woodruff Key (1/16" x 1/16")
15984b	2	Detail	UNC .5D Fine Thread Hex Nut
15984c	2	Detail	Flat Washer

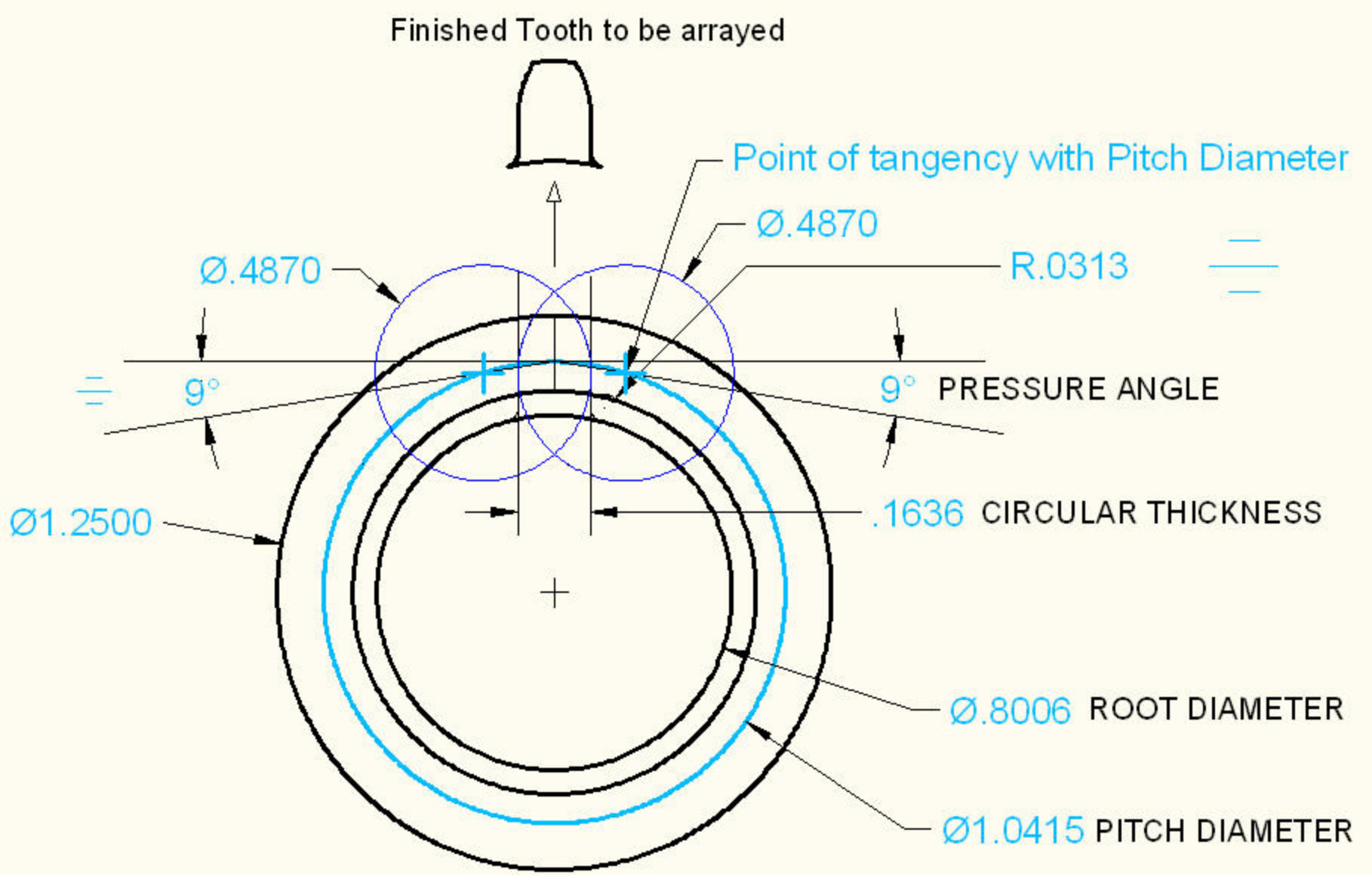
Finished Tooth to be arrayed
Point of tangency with Pitch Diameter
Ø.4870
Ø.4870
R.0313
9°
9°
PRESSURE ANGLE
Ø1.2500
.1636
CIRCULAR THICKNESS
Ø.8006
ROOT DIAMETER
Ø1.0415
PITCH DIAMETER

5

10	N= the number of teeth
9.6	DP= diametric pitch
.32725	CP= circulator pitch= 3.1416/DP
1.0416	PD= pitch diameter= N/DP
1.25	OD= outside diameter= N+2/DP
.8006	RD= root diameter= DP-2D
.10416	A= addendum= 1/DP
.1205	D= dedendum= 1/DP
.0163541	C= clearance= 0.157/DP
.22466	WD= whole depth= A+D
.163625	CT= circular thickness= CP/2
.03125R	F= fillet
9.00	PA= pressure angle

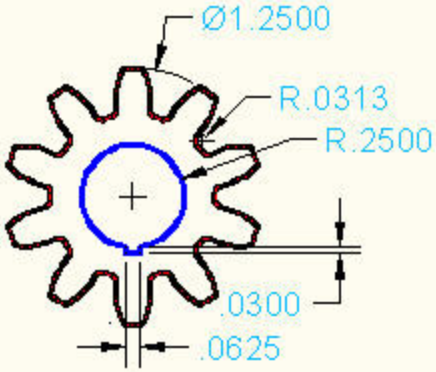

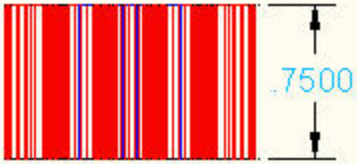

85030 Alpha 1 oil seal

Skills USA 6/25/2009

Drawing	Quantity	Type	Description
15980	1	atail/Assem	Housing Gear/Pulley-Assembly
15981	1	Detail	Gear Driven Pulley Housing
15982	1	Detail	Bronze bushing with oil gallery
15983	1	Detail	High Pressure Oil Seal
15984	1	Detail	Threaded and keyed bearing shaft
15985	1	Detail	Involute Spur Gear (keyed shaft)
15986	1	Detail	V-belt pulley (keyed shaft)
15984a	2	Detail	Woodruff Key (1/16" x 1/16")
15984b	2	Detail	UNC .5D Fine Thread Hex Nut
15984c	2	Detail	Flat Washer

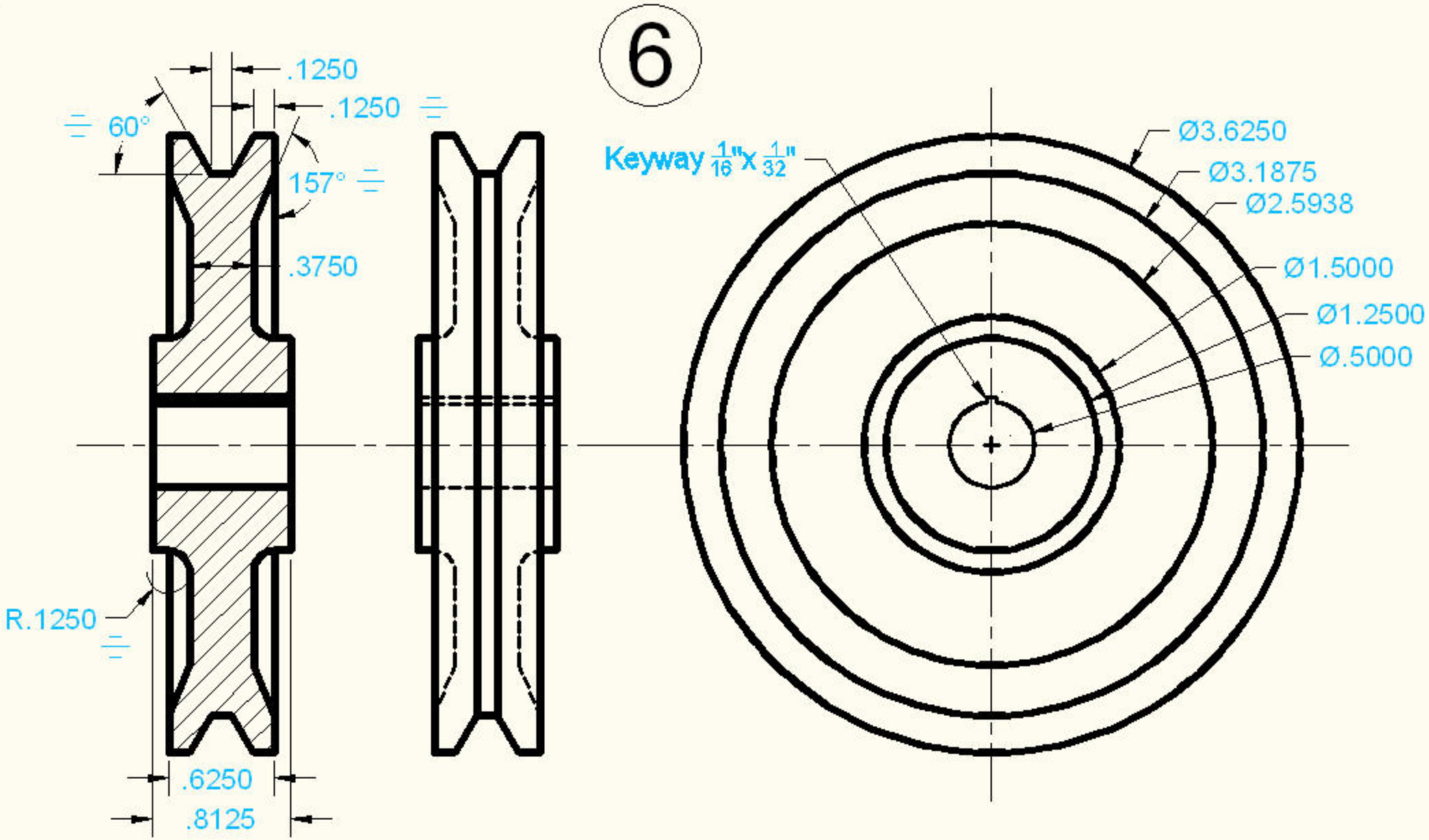
6
.1250
.1250
60°
157°
.3750
R.1250
.6250
.8125
Keyway 1/16"x 1/32"
Ø3.6250
Ø3.1875
Ø2.5938
Ø1.5000
Ø1.2500
Ø.5000

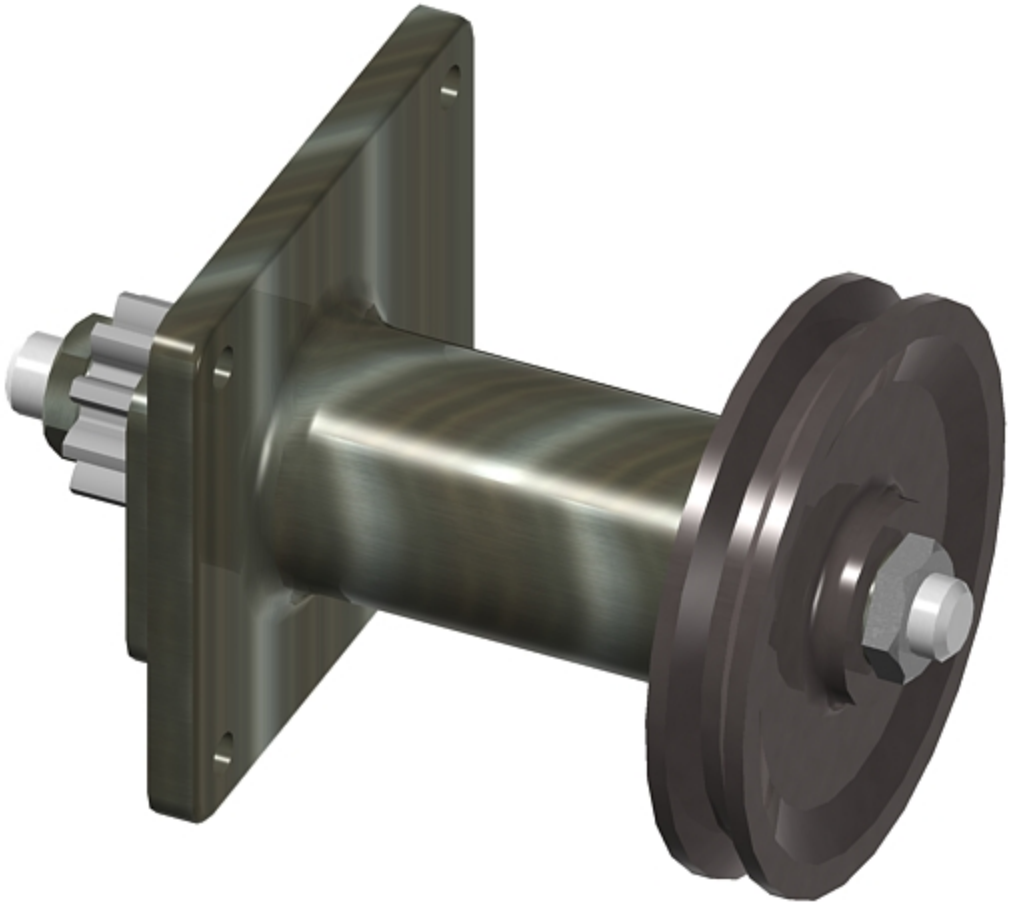

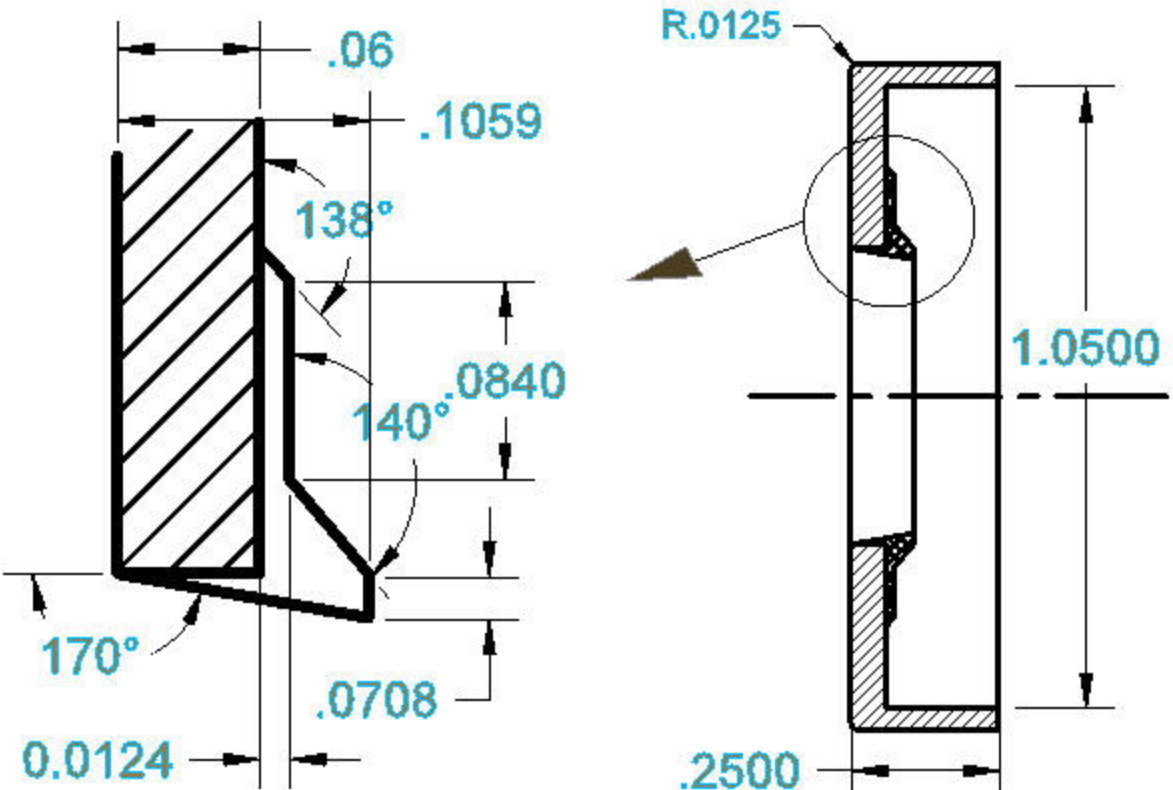
.06
.1059
138°
.0840
140°
170°
.0708
0.0124
R.0125
1.0500
.2500

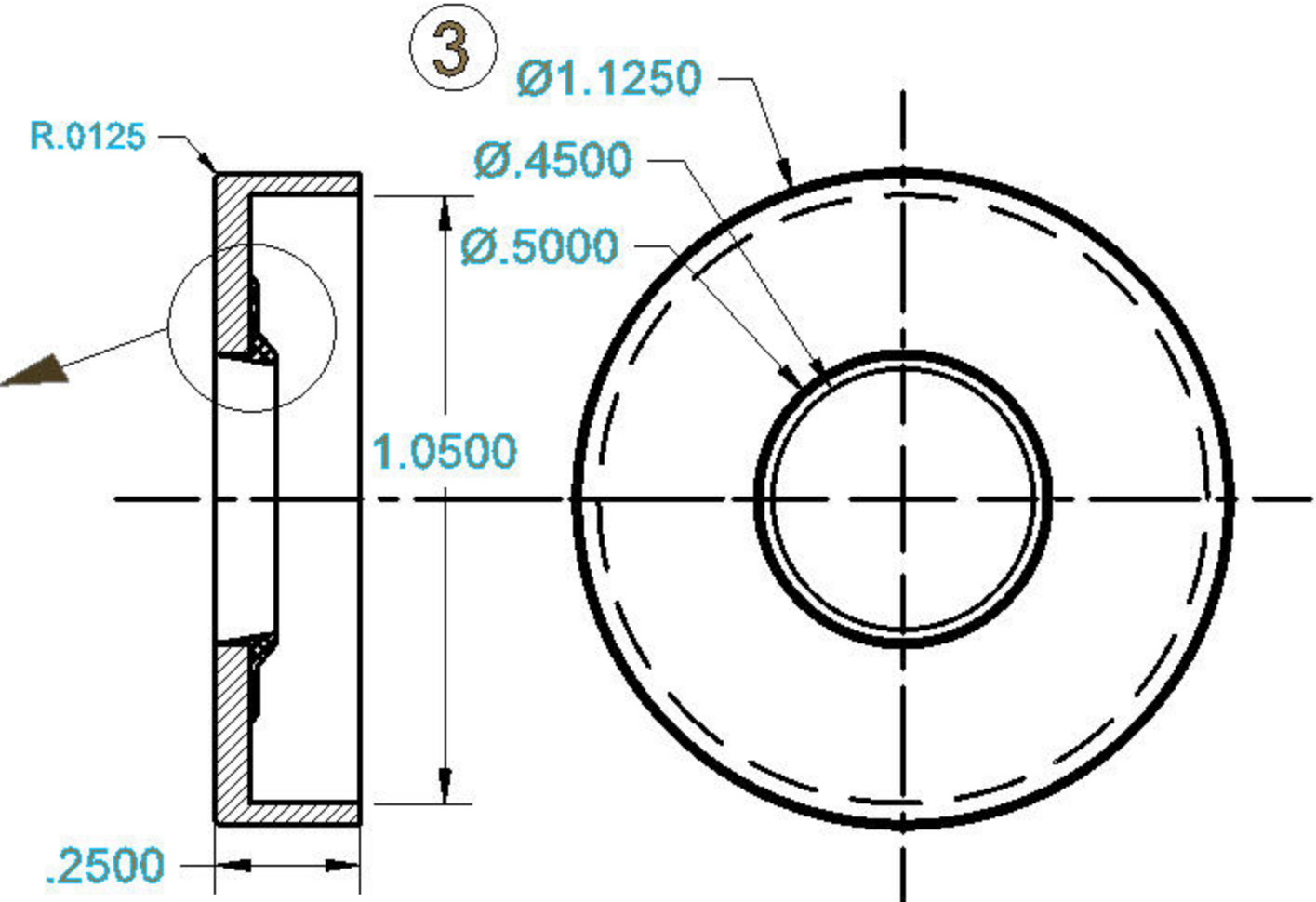
3
Ø1.1250
R.0125
Ø.4500
Ø.5000
1.0500
.2500

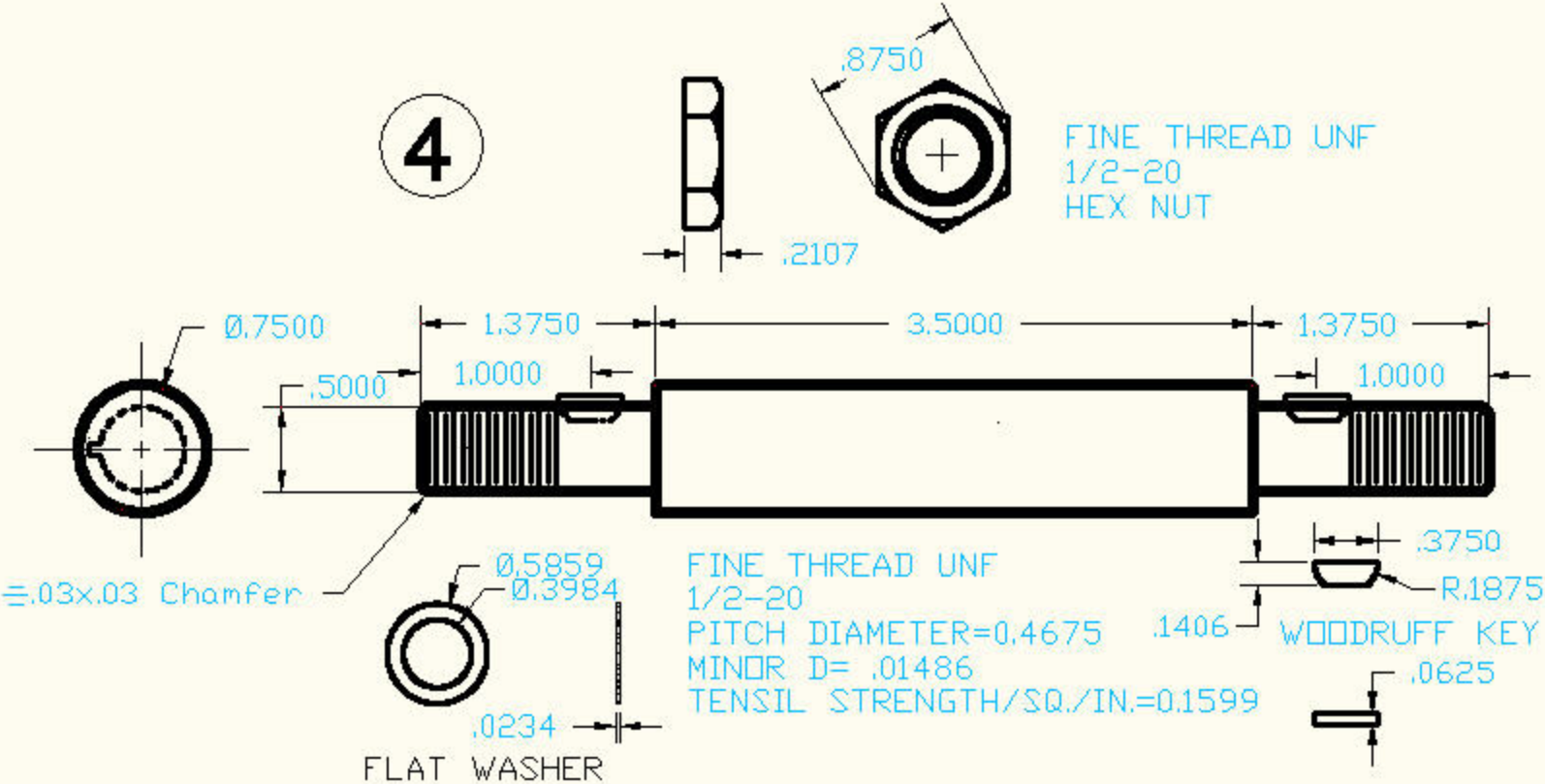
4
.8750
FINE THREAD UNF
1/2-20
HEX NUT
.2107
Ø.7500
1.3750
3.5000
1.3750
.5000
1.0000
1.0000
.03x.03 Chamfer
Ø.5859
Ø.3984
FINE THREAD UNF
1/2-20
PITCH DIAMETER=0.4675
MINOR D= .01486
TENSIL STRENGTH/SQ./IN.=0.1599
.3750
R.1875
.1406
WOODRUFF KEY
.0625
.0234
FLAT WASHER

Standard Thread Pitches

Thread series cover designations of diameter/pitch combinations that are measured by the number of threads per inch (TPI) applied to a single diameter.

QUICK LINKS

- Download PDF
- Bolt Torque Chart
- Nut Compatibility Chart
- A307 All Thread Rod
- Ask the Expert

Coarse Thread Series (UNC/UNRC) is the most common designation for general application bolts and nuts. Coarse thread is beneficial, because they are less likely to cross thread, more tolerant in adverse conditions and facilitate quick assembly.

Fine Thread Series (UNF/UNRF) is commonly used in precision applications. Because of the larger tensile stress areas, they have high tension strength. However, a longer engagement is required for fine thread applications than for coarse series threads to prevent stripping.

8 - Thread Series (8UN) is the specified thread forming method for several ASTM standards including A193 B7, A193 B8/B8M, and A320. This series is used for diameters one inch and above.

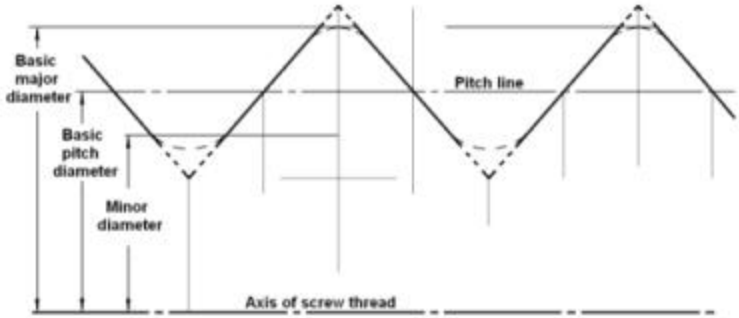

Coarse Thread Series - UNC				Fine Thread Series - UNF				8-Thread Series - 8UN			
Nominal Size and Threads Per In.	Basic Pitch Dia. In.	Section at Minor Dia. Sq in.	Tensile Stress Area Sq in.	Nominal Size and Threads Per In.	Basic Pitch Dia. In.	Section at Minor Dia. Sq in.	Tensile Stress Area Sq in.	Nominal Size and Threads Per In.	Basic Pitch Dia. In.	Section at Minor Dia. Sq in.	Tensile Stress Area Sq in.
-- --	--	--	--	0 - 80	0.0519	0.00151	0.00180	-- --	--	--	--
1 - 64	0.0629	0.00218	0.00263	1 - 72	0.0640	0.00237	0.00278				
2 - 56	0.0744	0.00310	0.00370	2 - 64	0.0759	0.00339	0.00394				
3 - 48	0.0855	0.00406	0.00487	3 - 56	0.0874	0.00451	0.00523				
4 - 40	0.0958	0.00496	0.00604	4 - 48	0.0985	0.00566	0.00661	-- --	--	--	--
5 - 40	0.1088	0.00672	0.00796	5 - 44	0.1102	0.00716	0.00830				
6 - 32	0.1177	0.00745	0.00909	6 - 40	0.1218	0.00874	0.01015				
8 - 32	0.1437	0.01196	0.0140	8 - 36	0.1460	0.01285	0.01474				
10 - 24	0.1629	0.01450	0.0175	10 - 32	0.1697	0.0175	0.0200	-- --	--	--	--
12 - 24	0.1889	0.0206	0.0242	12 - 28	0.1928	0.0226	0.0258	-- --	--	--	--
1/4 - 20	0.2175	0.0269	0.0318	1/4 - 28	0.2268	0.0326	0.0364	-- --	--	--	--
5/16 - 18	0.2764	0.0454	0.0524	5/16 - 24	0.2854	0.0524	0.0580	-- --	--	--	--
3/8 - 16	0.3344	0.0678	0.0775	3/8 - 24	0.3479	0.0809	0.0878	-- --	--	--	--
7/16 - 14	0.3911	0.0933	0.1063	7/16 - 20	0.4050	0.1090	0.1187	-- --	--	--	--
1/2 - 13	0.4500	0.1257	0.1419	1/2 - 20	0.4675	0.1486	0.1599	-- --	--	--	--
9/16 - 12	0.5084	0.162	0.182	9/16 - 18	0.5264	0.189	0.203	-- --	--	--	--

ITEM NO.	QTY	PART NO	DESCRIPTION
7	1	15980	HOUSING GEAR BELT ASSEMBLY
1	1	15981	GEAR DRIVEN PULLEY HOUSING
2	1	15982	BRONZE BUSING WITH OIL GALLERY
3	1	15983	HIGH PRESSURE OIL SEAL
4	1	15984	THREADED AND KEYED BEARING SHAFT
5	1	15985	INVOLUTE SPUR GEAR
6	1	15986	V-BELT PULLEY
8	2	15984A	WOODRUFF KEY (1/16"X 1/16")
9	2	15984B	UNC .5"D FINE THREAD HEX NUT
10	2	15984C	FLAT WASHER

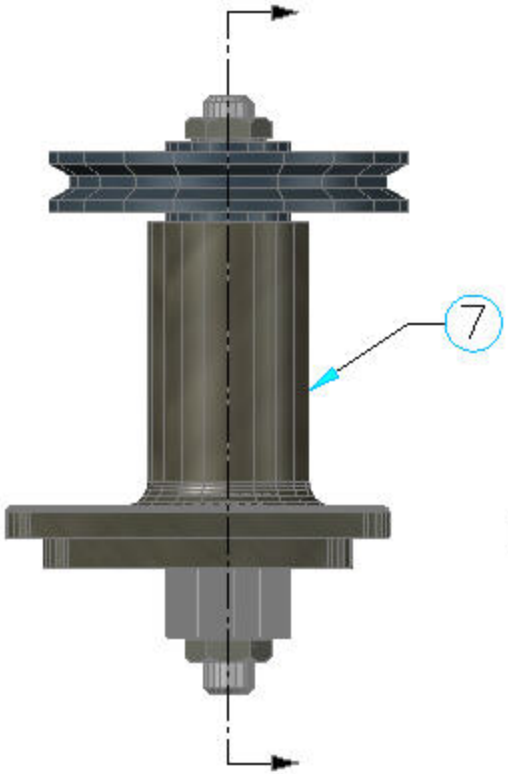

FRONT VIEW

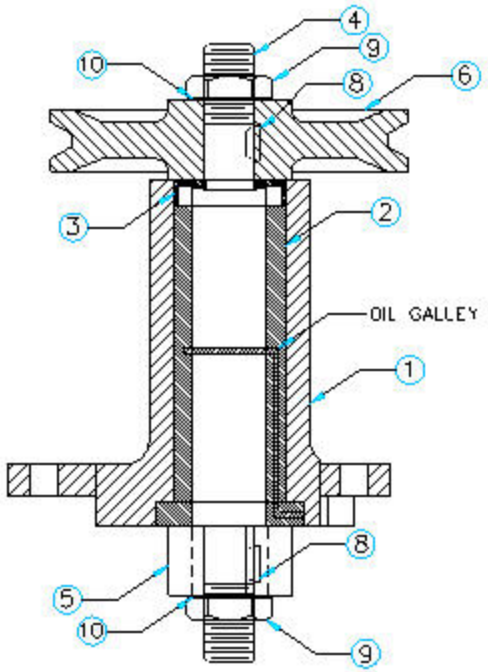

FULL SECTION FRONT VIEW

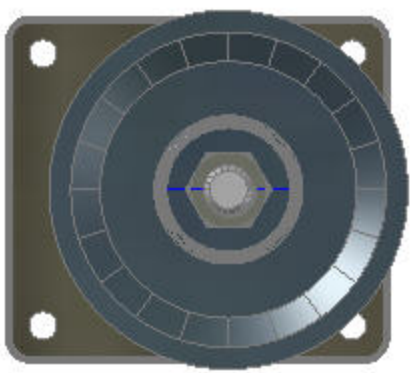

TOP VIEW

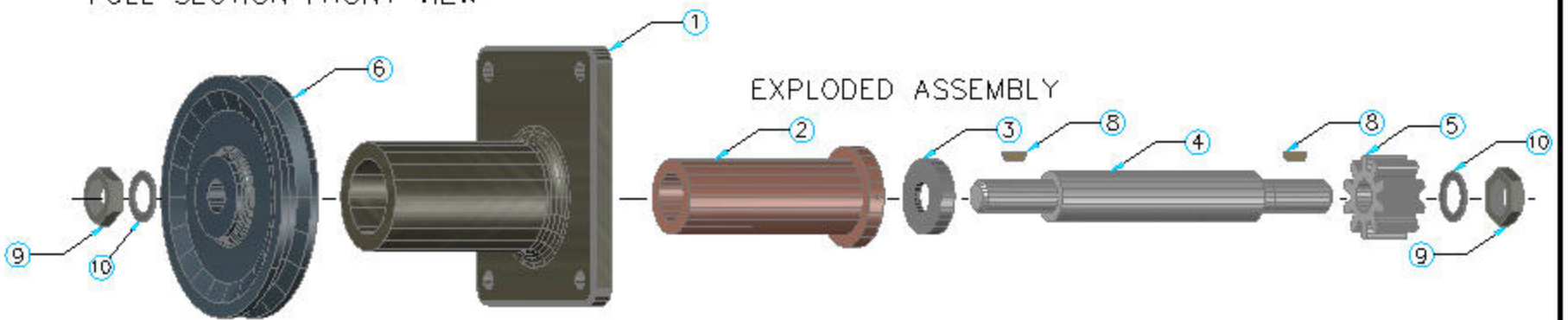

EXPLODED ASSEMBLY

UNLESS OTHERWISE SPECIFIED DIMENSIONS ARE IN INCHES TOLERANCES ARE: FRACTIONS ± 1/16 DECIMAL .XX ± .03 .XXX ± .004 ANGLES ± 1°	WEIGHT: 2.00 #	DRAWING NAME: HOUSING/GEAR/PULLEY ASSEMBLY
	MATERIAL: 2024 STEEL	
Skills USA Leesburg, VA	SCALE: 1:2	CONTESTANT #: 2.00 #
	SHEET NO: 15980	CONTESTANT INITIALS: 2.00 #

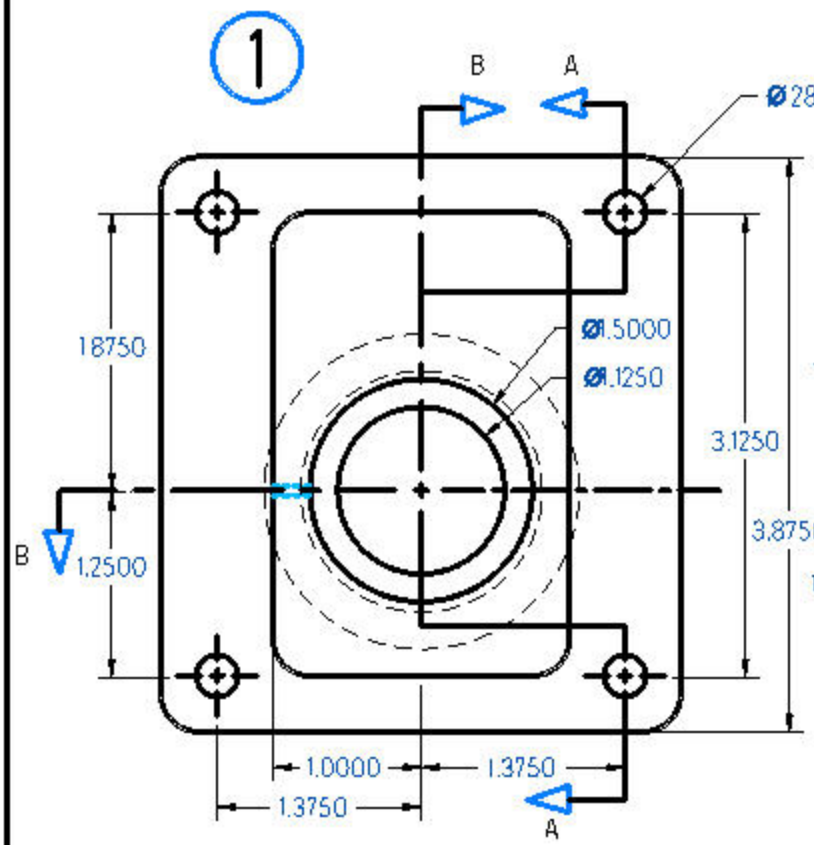

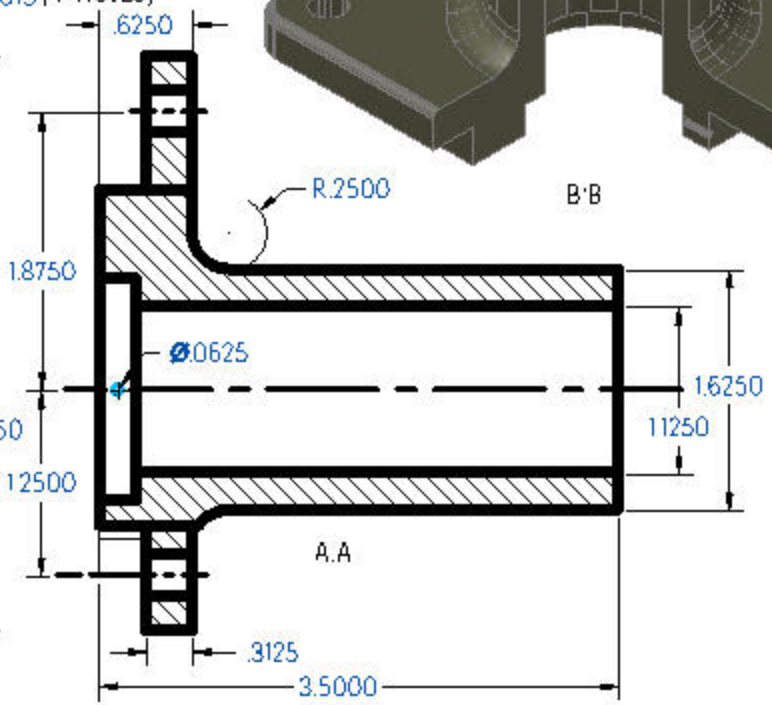

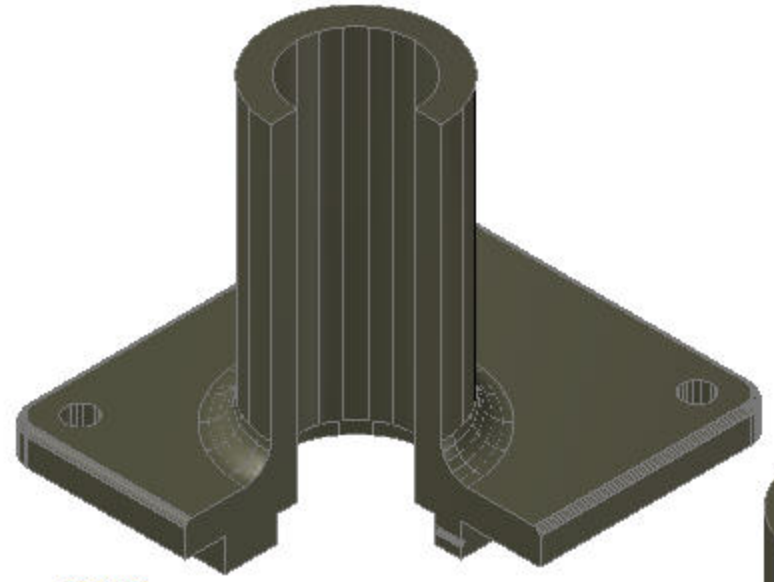

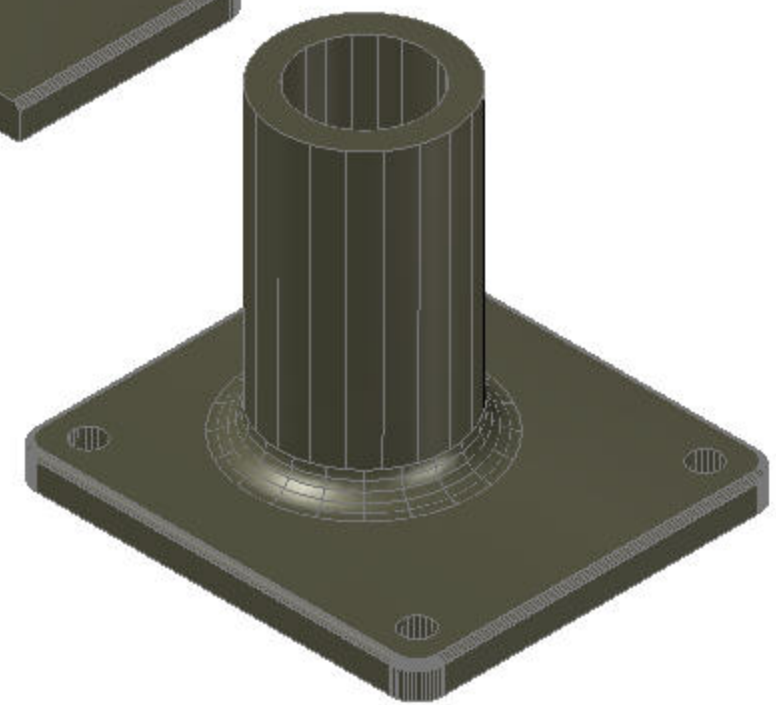

UNLESS OTHERWISE SPECIFIED DIMENSIONS ARE IN INCHES TOLERANCES ARE FRACTIONS ± 1/16 DECIMAL .XX ± .03 .XXX ± .005 ANGLES ± 1°	WEIGHT 2.00 lbs.	DRAWING NAME: HOUSING FOR GEAR DRIVEN PULLEY
	MATERIAL A360 DIE CAST ALUMINUM	
Skills USA Leesburg/VA	SCALE: 1:1	CONTESTANT NO: XXXX
	SHEET NO: 15981	CONTESTANT INITIALS: XXXX

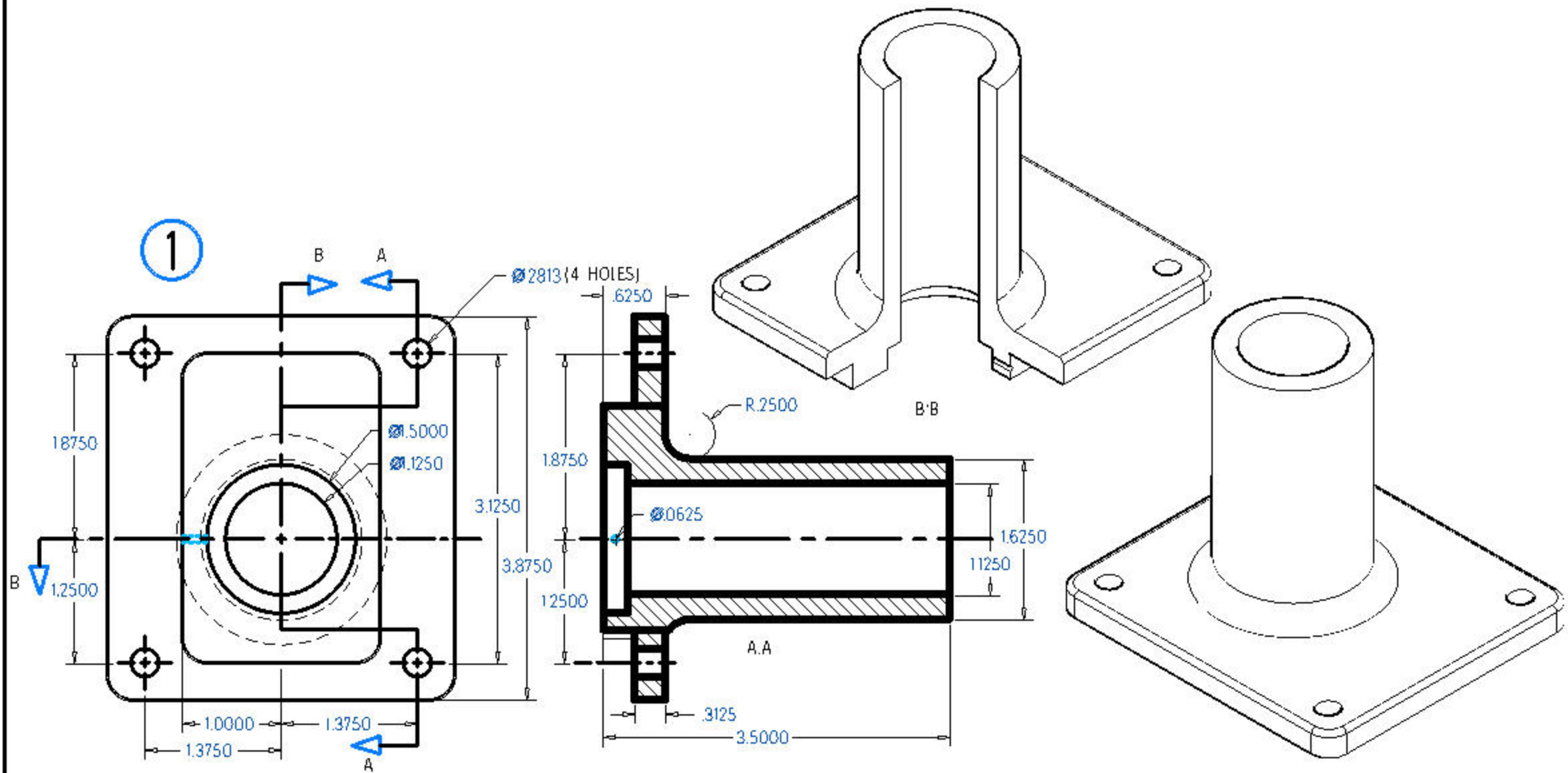

UNLESS OTHERWISE SPECIFIED DIMENSIONS ARE IN INCHES TOLERANCES ARE FRACTIONS ± 1/16 DECIMAL .XX ± .03 .XXX ± .005 ANGLES ± 1°	WEIGHT 2.00 lbs.	DRAWING NAME: HOUSING FOR GEAR DRIVEN PULLEY
	MATERIAL A360 DIE CAST ALUMINUM	
Skills USA Leesburg/VA	SCALE: 1:1	CONTESTANT NO: XXXX
	SHEET NO: 15981	CONTESTANT INITIALS: XXXX

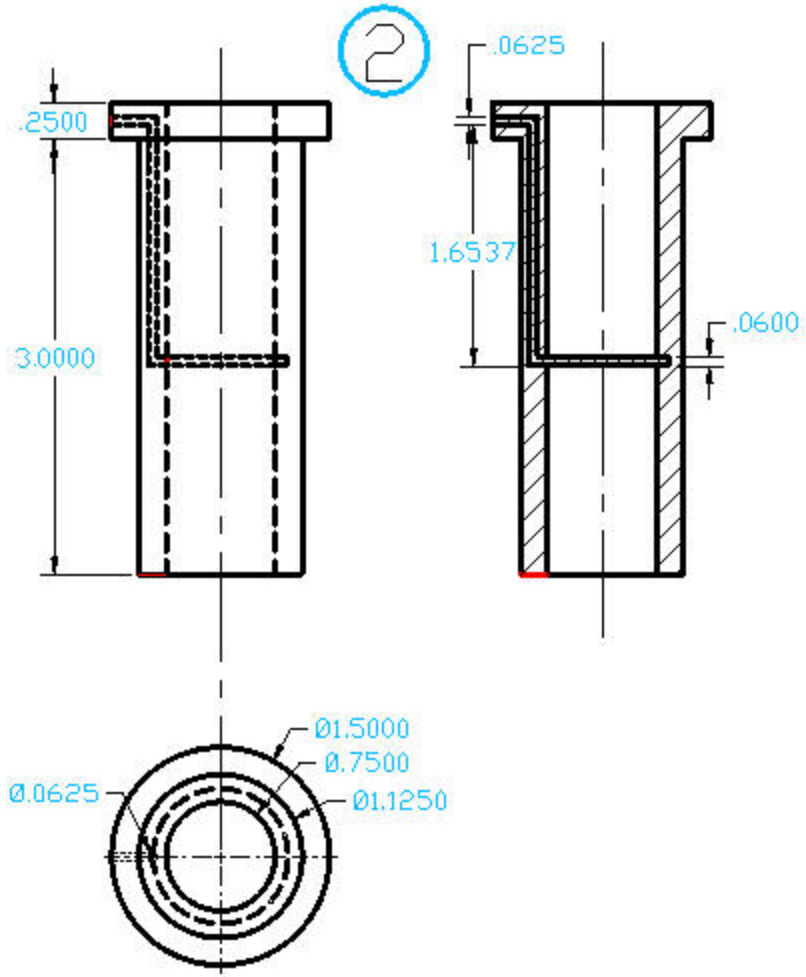

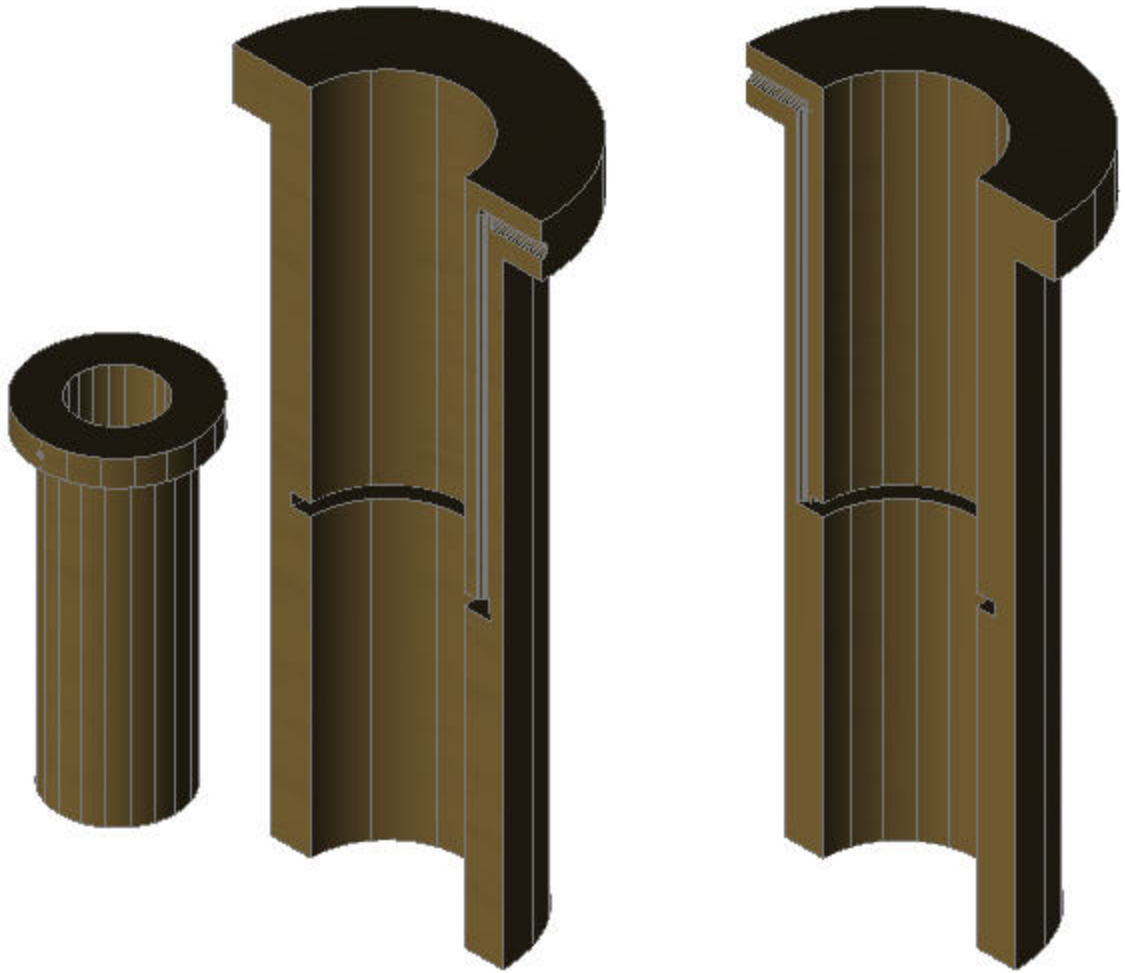

2:1- 3D FULL SECTION

UNLESS OTHERWISE SPECIFIED DIMENSIONS ARE IN INCHES TOLERANCES ARE: FRACTIONS ± 1/16 DECIMAL .XX ± .03 .XXX ± .004 ANGLES ± 1°	WEIGHT: .25 lbs.	DRAWING NAME: BRONZE BUSHING WITH OIL GALLEY
	MATERIAL: SF-1F BRONZE	
Skills USA Leesburg, VA	SCALE: 1:1,2:1	CONTESTANT #: 2.00 #
	SHEET NO: 15982	CONTESTANT INITIALS: 2.00 #

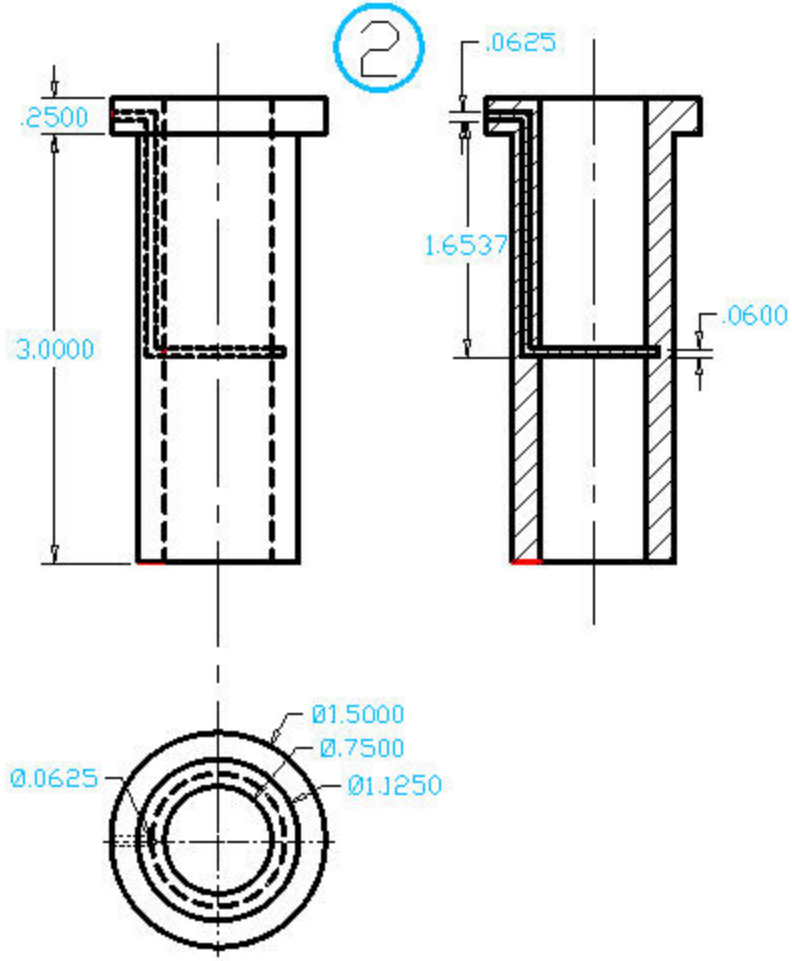

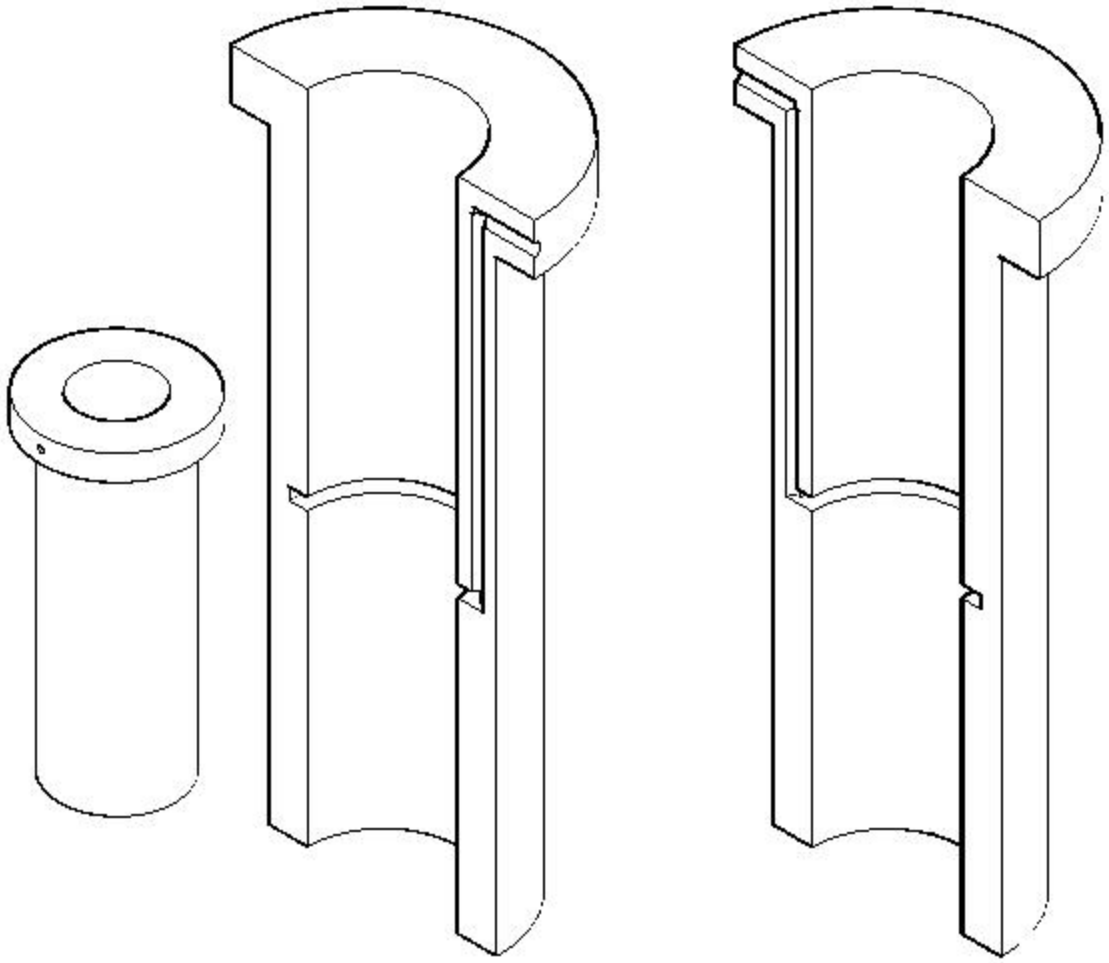

2:1- 3D FULL SECTION

UNLESS OTHERWISE SPECIFIED DIMENSIONS ARE IN INCHES TOLERANCES ARE: FRACTIONS ± 1/16 DECIMAL .XX ± .03 .XXX ± .004 ANGLES ± 1°	WEIGHT: .25 lbs.	DRAWING NAME: BRONZE BUSHING WITH OIL GALLEY
	MATERIAL: SF-1F BRONZE	
Skills USA Leesburg, VA	SCALE: 1:1,2:1	CONTESTANT #: 2.00 #
	SHEET NO: 15982	CONTESTANT INITIALS: 2.00 #

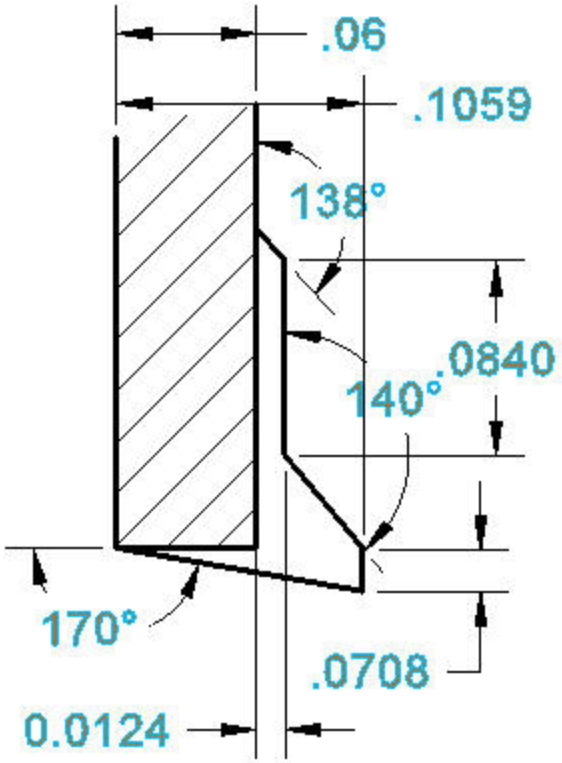

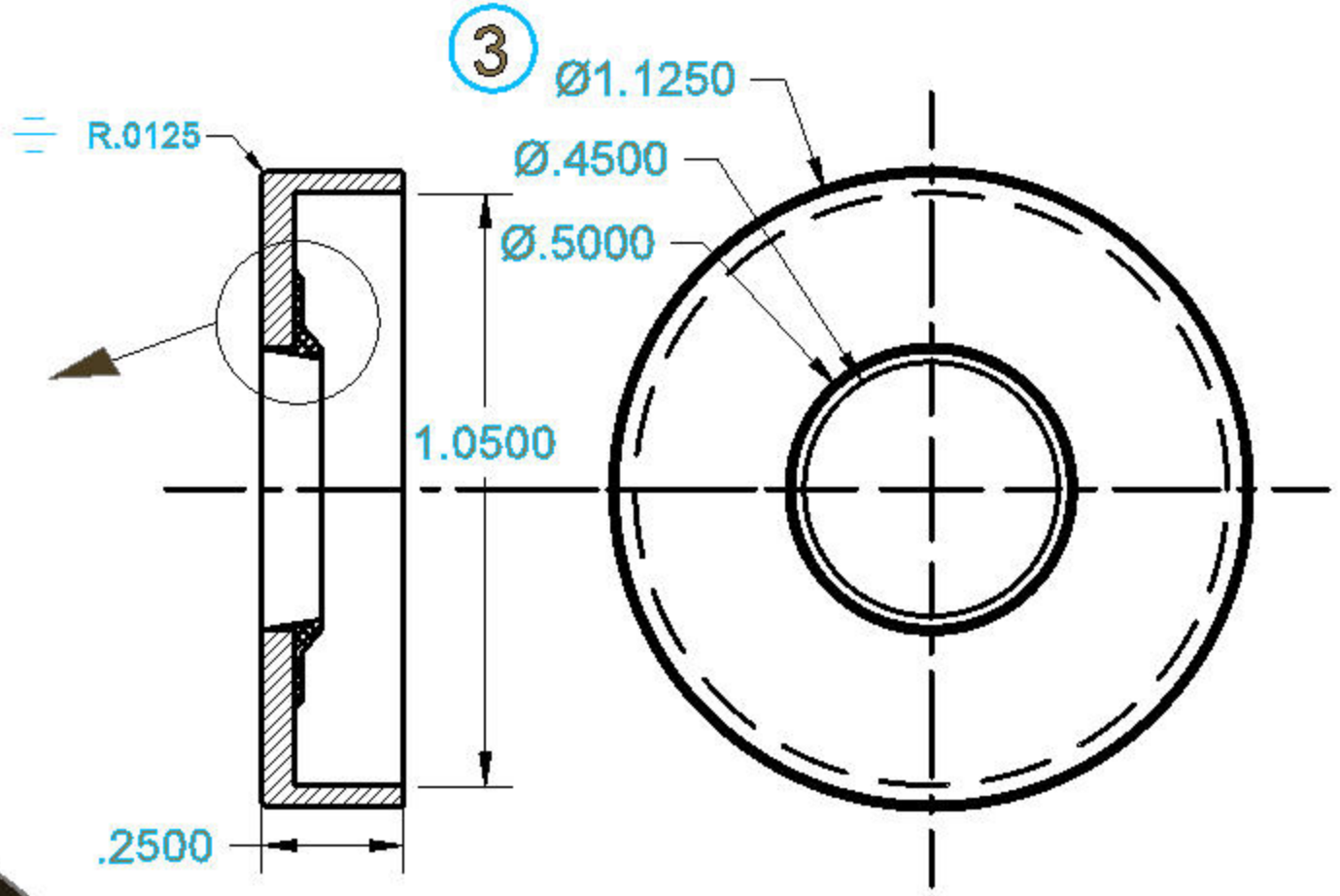

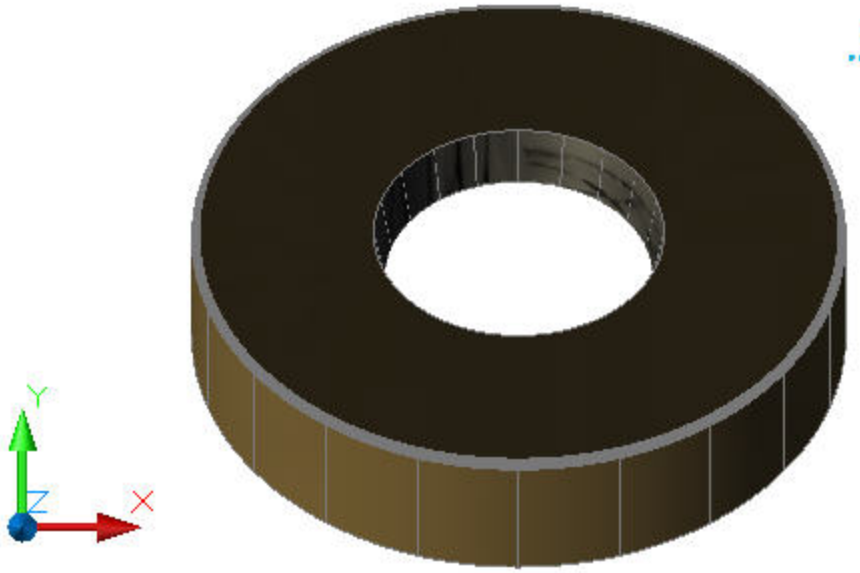

UNLESS OTHERWISE SPECIFIED DIMENSIONS ARE IN INCHES TOLERANCES ARE: FRACTIONS ±1/16 DECIMAL ANGLES	WEIGHT: 2.00 #	DRAWING NAME: HIGH PRESSURE OIL SEAL
	MATERIAL: NATIONAL OIL SEAL	
Skills USA Leesburg, VA	SCALE: 1:2,1:4	CONTESTANT #: 2.00 #
	SHEET NO: 15984	CONTESTANT INITIALS: 2.00 #

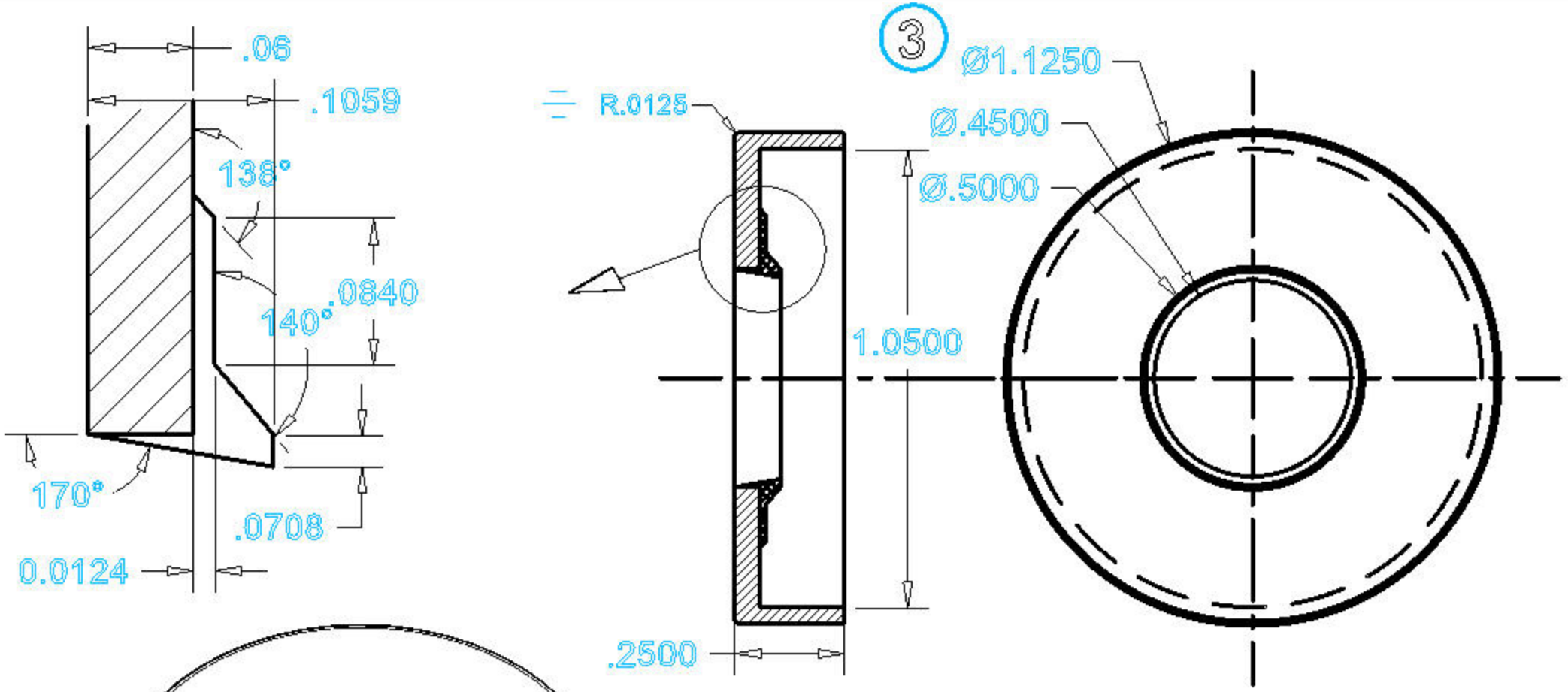

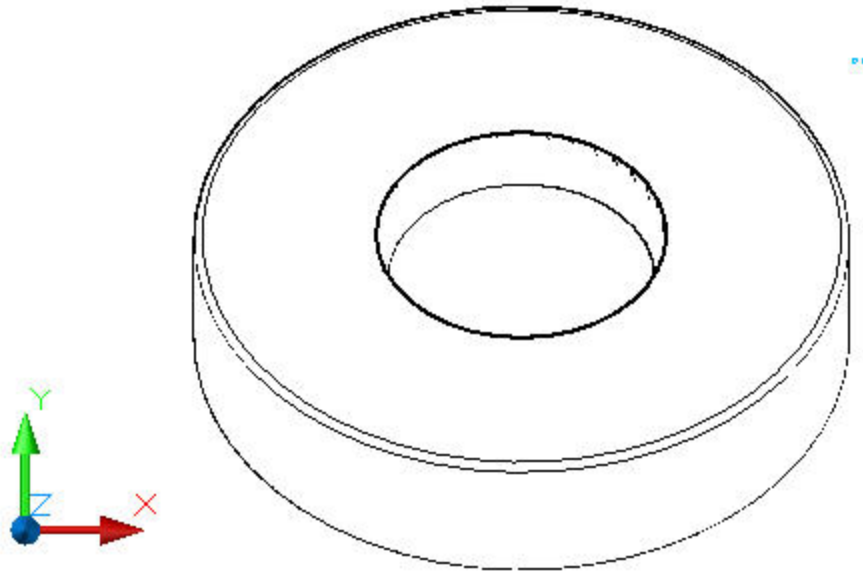

UNLESS OTHERWISE SPECIFIED DIMENSIONS ARE IN INCHES TOLERANCES ARE: FRACTIONS ±1/16 DECIMAL .XX ±.02 .XXX ±.005 ANGLES ±2°	WEIGHT: 2.00 #	DRAWING NAME: HIGH PRESSURE OIL SEAL
	MATERIAL: NATIONAL OIL SEAL	
Skills USA Leesburg, VA	SCALE: 1:2,1:4	CONTESTANT #: 2.00 #
	SHEET NO: 15984	CONTESTANT INITIALS: 2.00 #

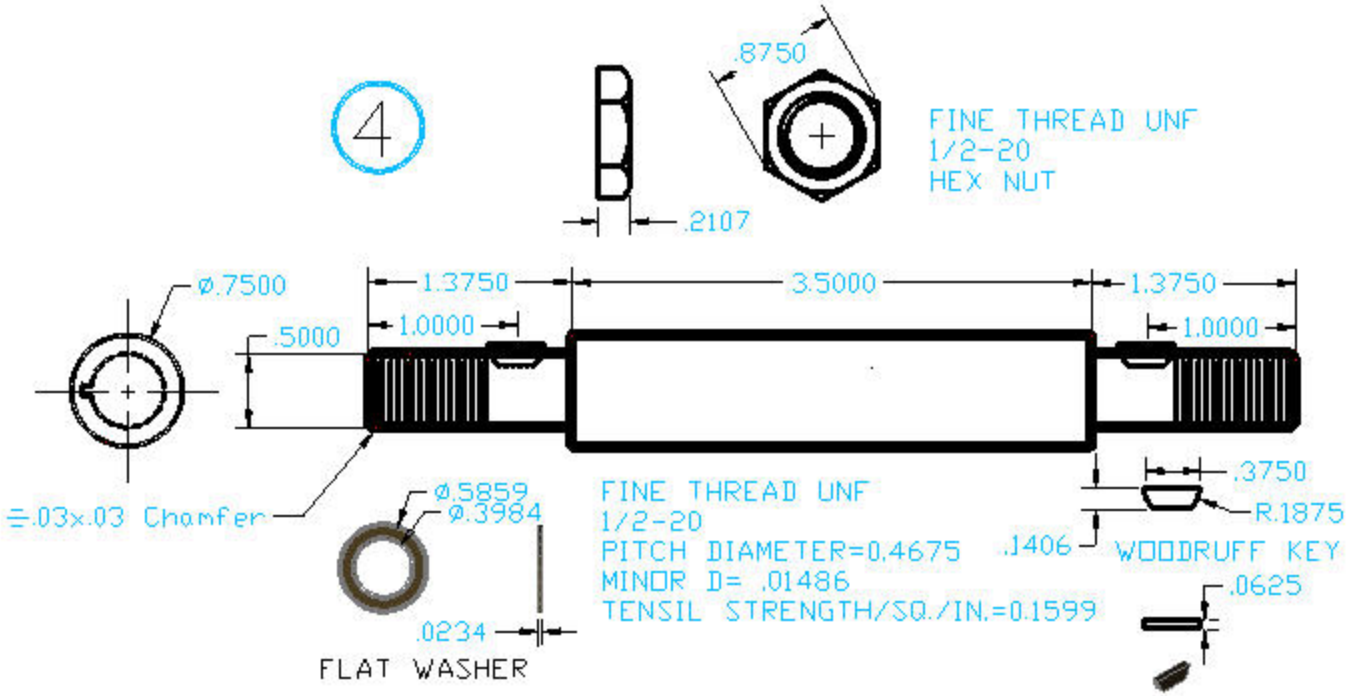

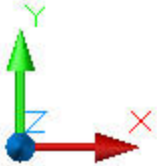

UNLESS OTHERWISE SPECIFIED DIMENSIONS ARE IN INCHES TOLERANCES ARE: FRACTIONS ± 1/16 DECIMAL .XX ± .03 .XXX ± .014 ANGLES ± 1°	WEIGHT: 1.25 lbs.	DRAWING NAME: THREADED AND KEYED SHAFT
	MATERIAL: 4115 (CR-1/2MO)	
Skills USA Leesburg, VA	SCALE: 1:1	CONTESTANT #: XXXX
	SHEET NO: 15984	CONTESTANT INITIALS: XXXX

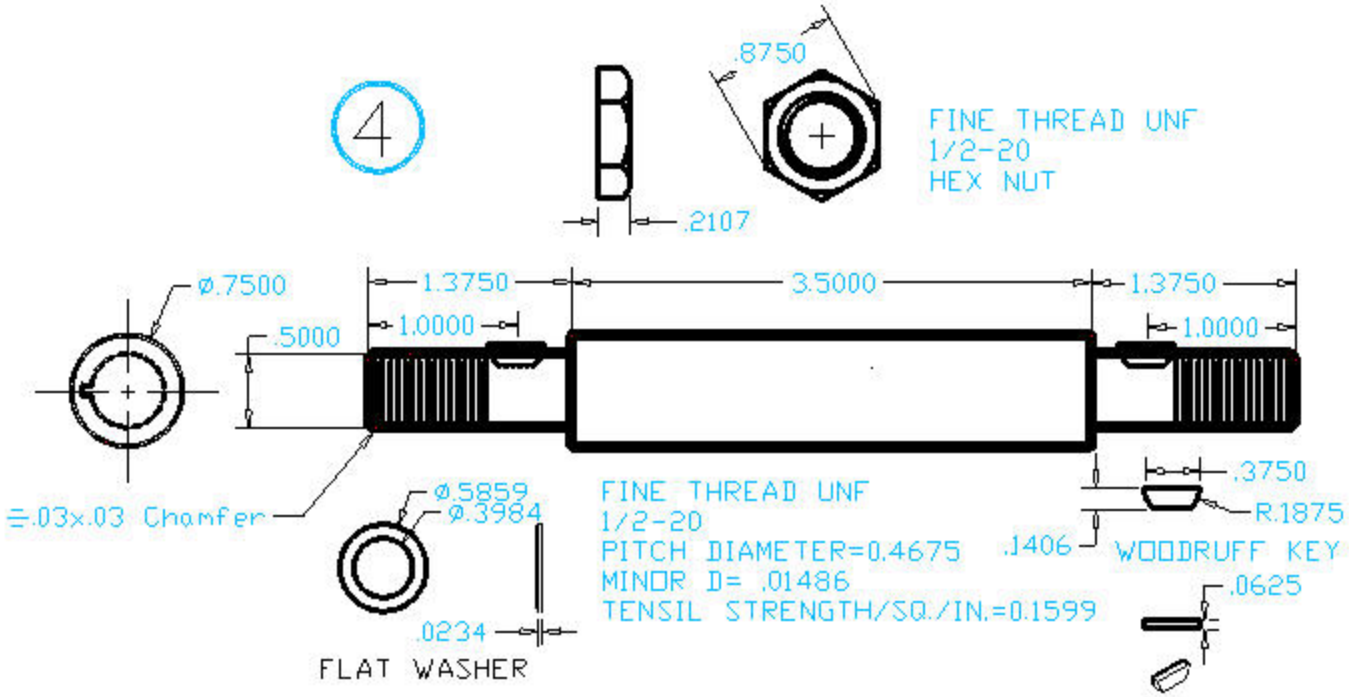

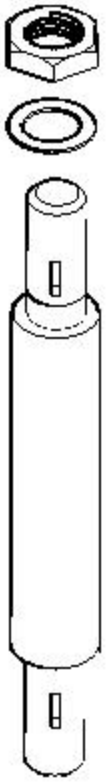

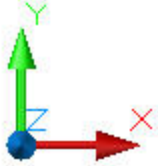

UNLESS OTHERWISE SPECIFIED DIMENSIONS ARE IN INCHES TOLERANCES ARE: FRACTIONS DECIMAL ANGLES	WEIGHT: 1.25 lbs.	DRAWING NAME: THREADED AND KEYED SHAFT
	MATERIAL: 4115 (CR-1/2MO)	
Skills USA Leesburg, VA	SCALE: 1:1	CONTESTANT #: XXXX
	SHEET NO: 15984	CONTESTANT INITIALS: XXXX

5

10	N= the number of teeth
9.6	DP= diametric pitch
.32725	CP= circulator pitch= 3.1416/DP
1.0416	PD= pitch diameter= N/DP
1.25	OD= outside diameter= N+2/DP
.8006	RD= root diameter= DP-2D
.10416	A= addendum= 1/DP
.1205	D= dedendum= 1/DP
.0163541	C= clearance= 0.157/DP
.22466	WD= whole depth= A+D
.163625	CT= circular thickness= CP/2
.03125R	F= fillet
9.00	PA= pressure angle

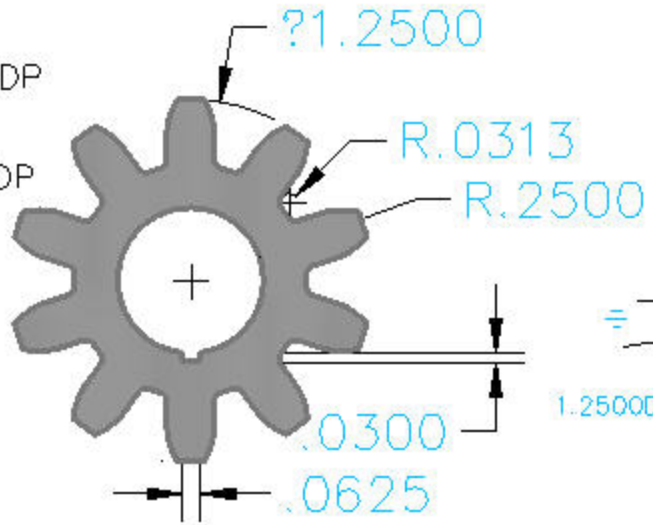

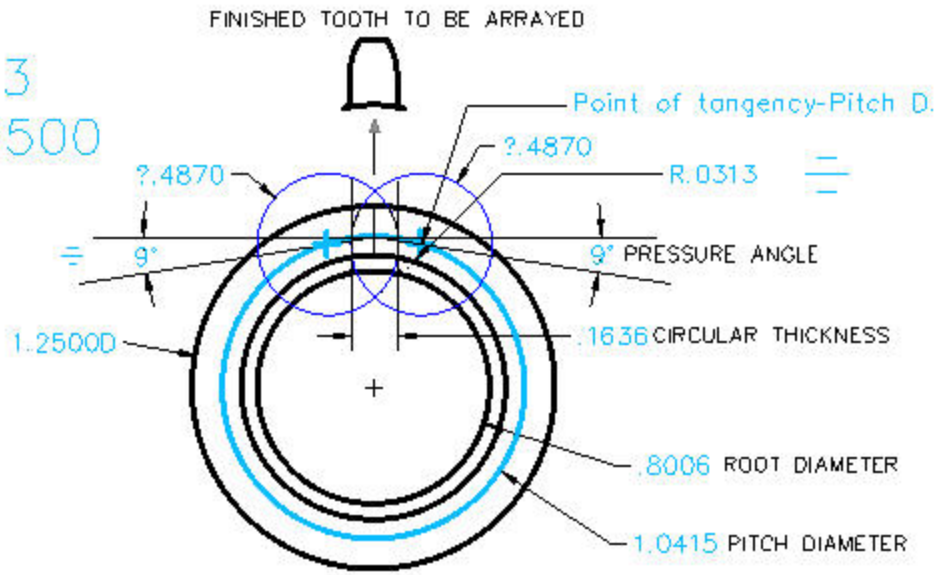

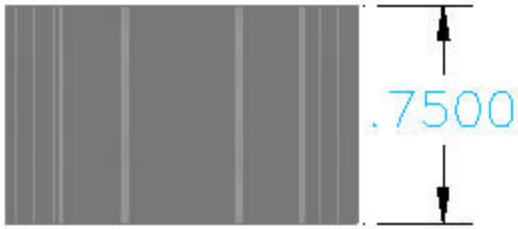

UNLESS OTHERWISE SPECIFIED DIMENSIONS ARE IN INCHES TOLERANCES ARE: FRACTIONS ± 1/16 .XX ± .03 .XXX ± .005 ANGLES ± 1°	WEIGHT: 1.125 lbs.	DRAWING NAME: INVOLUTE SPUR GEAR KEYED SHAFT
	MATERIAL: AISI 9310 GEAR STEEL	
Skills USA Leesburg, VA	SCALE: 1:2	CONTESTANT #: 2.00 #
	SHEET NO: 15985	CONTESTANT INITIALS: 2 00 #

5

10	N= the number of teeth
9.6	DP= diametric pitch
.32725	CP= circulator pitch= 3.1416/DP
1.0416	PD= pitch diameter= N/DP
1.25	OD= outside diameter= N+2/DP
.8006	RD= root diameter= DP-2D
.10416	A= addendum= 1/DP
.1205	D= dedendum= 1/DP
.0163541	C= clearance= 0.157/DP
.22466	WD= whole depth= A+D
.163625	CT= circular thickness= CP/2
.03125R	F= fillet
9.00	PA= pressure angle

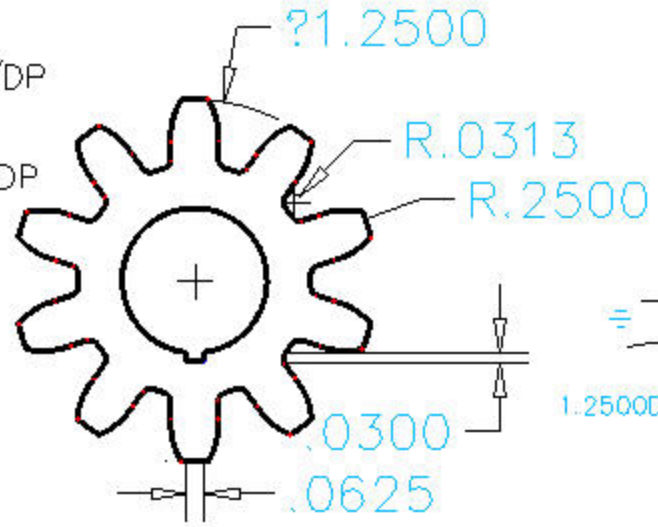

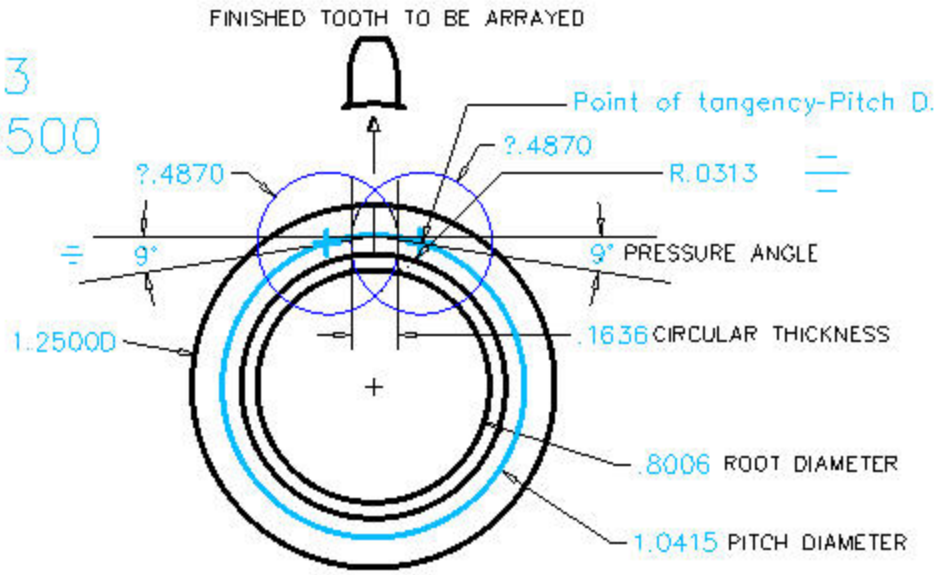

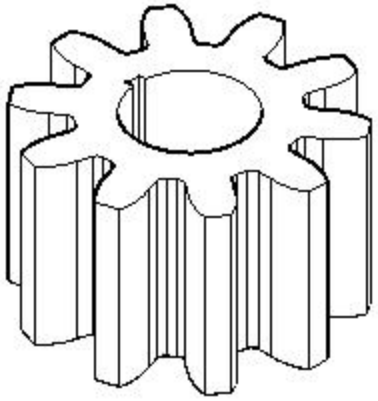

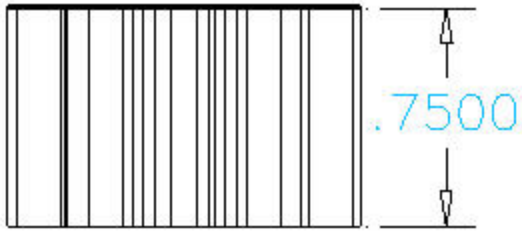

UNLESS OTHERWISE SPECIFIED DIMENSIONS ARE IN INCHES TOLERANCES ARE: FRACTIONS ± 1/16 DECIMAL .XX ± .03 .XXX ± .005 ANGLES ± 1°	WEIGHT: 2.00 #	DRAWING NAME: INVOLUTE SPUR GEAR KEYED SHAFT
	MATERIAL: AISI 9310 GEAR STEEL	
Skills USA Leesburg, VA	SCALE: 1:2	CONTESTANT #: 2.00 #
	SHEET NO: 15985	CONTESTANT INITIALS: 2.00 #

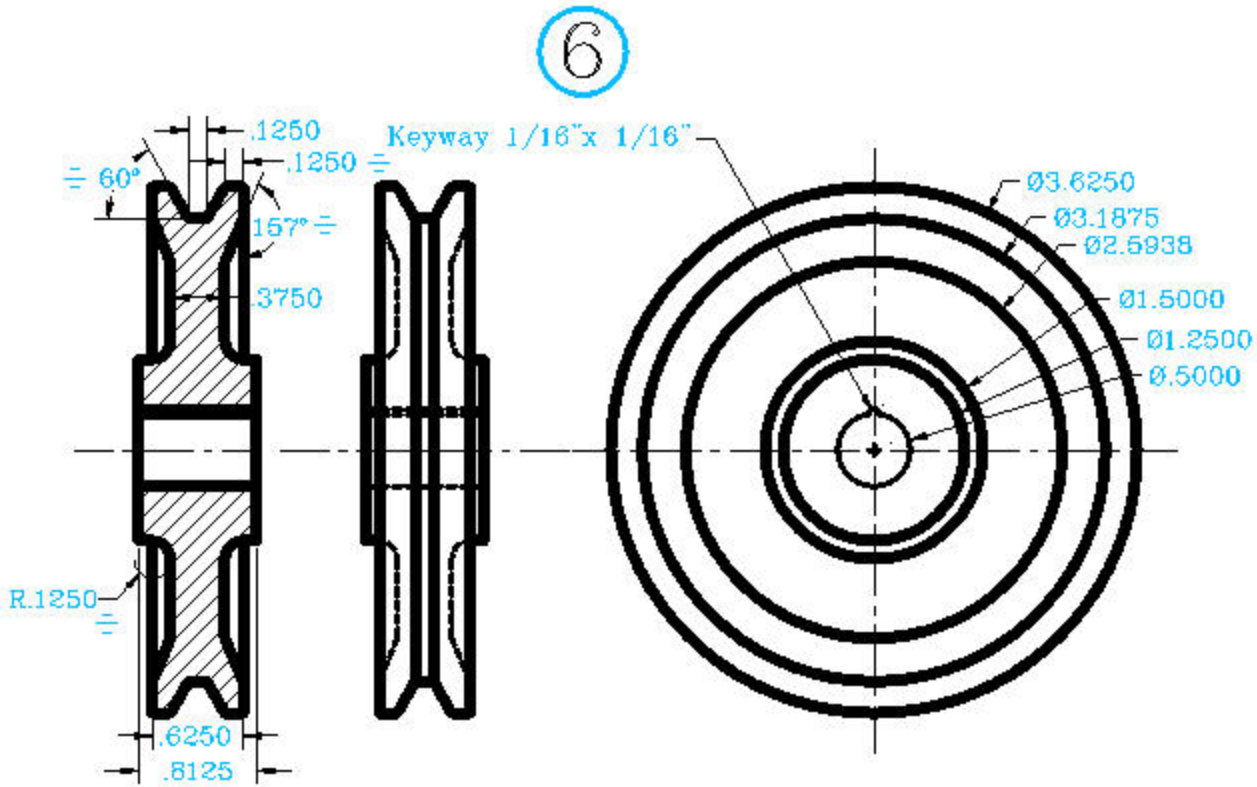

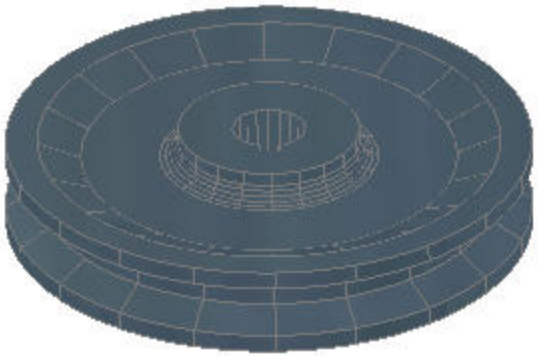

UNLESS OTHERWISE SPECIFIED DIMENSIONS ARE IN INCHES TOLERANCES ARE: FRACTIONS ± 1/16 DECIMAL .XX ± .03 .XXX ± .004 ANGLES ± 1°	WEIGHT: 2.00 #	DRAWING NAME: V-BELT PULLEY KEYED SHAFT
	MATERIAL: 2024 STEEL	
Skills USA Leesburg, VA	SCALE: 1:1	CONTESTANT #: 2.00 #
	SHEET NO: 15986	CONTESTANT INITIALS: 2.00 #

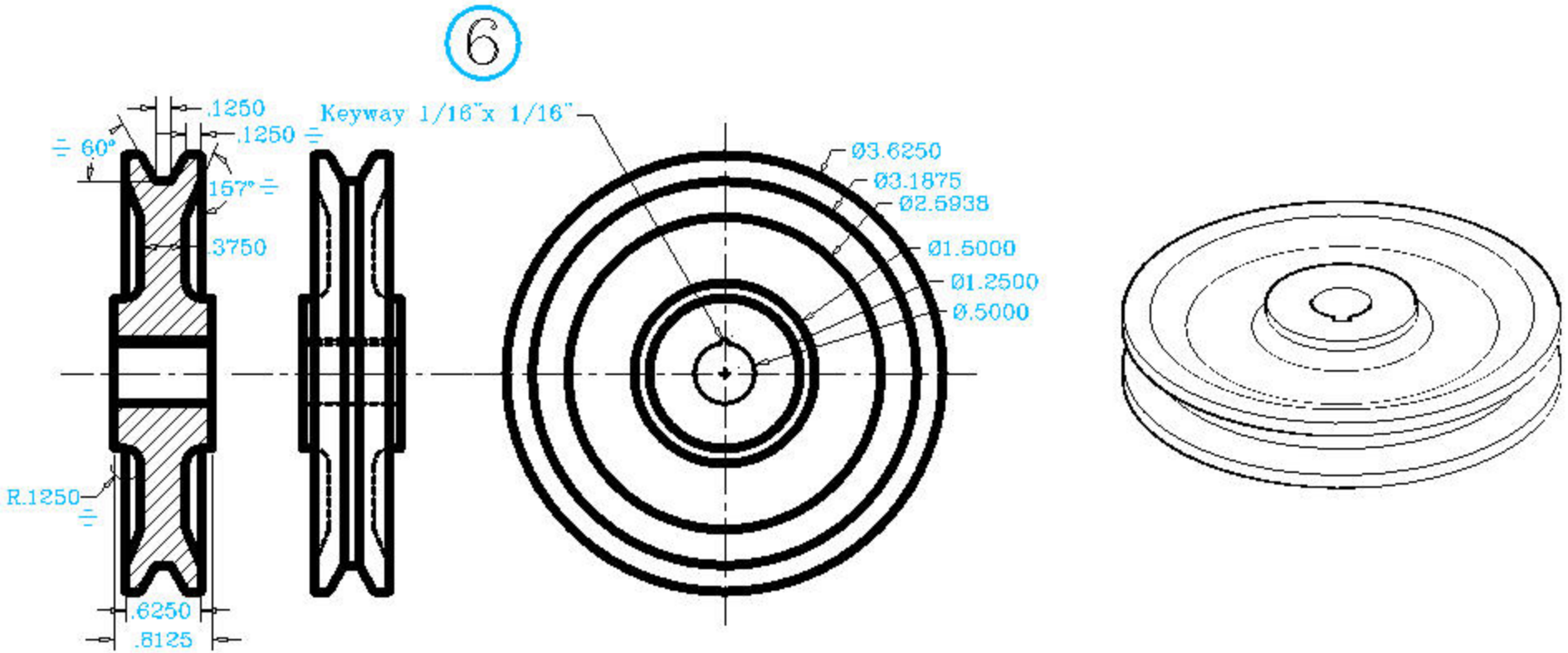

UNLESS OTHERWISE SPECIFIED DIMENSIONS ARE IN INCHES TOLERANCES ARE: FRACTIONS ± 1/16 DECIMAL .XX ± .03 .XXX ± .004 ANGLES ± 1°	WEIGHT: 2.00 #	DRAWING NAME: V-BELT PULLEY KEYED SHAFT
	MATERIAL: 2024 STEEL	
Skills USA Leesburg, VA	SCALE: 1:1	CONTESTANT #: 2.00 #
	SHEET NO: 15986	CONTESTANT INITIALS: 2.00 #